AC / Ball Bearing ULTRA THIN FAN — TF120RX Series

FEATURES:

- ***The thinnest axial fan available - .787" (20mm) thick***
- ***High Performance***
- ***Low noise level***
- ***Precision ball bearings provide long service life***
- ***Durable die cast aluminum frame***
- ***Choice of 115VAC or 230 VAC***
- ***Impedence protected***
- ***U.L. recognized - File Number E75082***
- ***CSA certified - File Number 48371M2***

MATERIAL: **Frame** - Die Cast Aluminum
Black paint finish
Impeller - Black polycarbonate
Bearings- Ball bearings
WEIGHT: 0.29kg (10.2 ounces)
DIMENSIONS: Millimeters (inches)
TOLERANCES: Millimeters - .x = ± .05, .xx = ± 0.3
(Inches) --.xx = ± .02, .xxx = ±.010

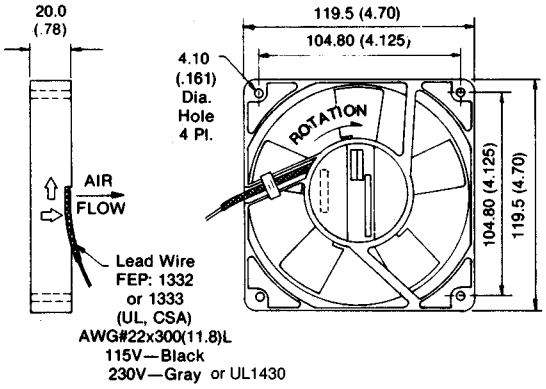

PERFORMANCE CURVES: (Obtained with test chamber and methods in accordance with AMCA Std. 210-74)

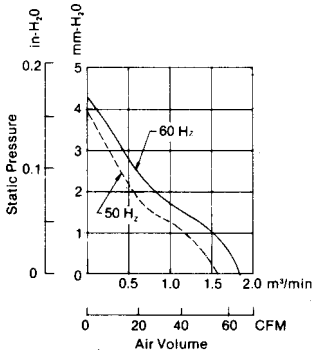

PART NUMBERS AND SPECIFICATIONS:

PART NUMBERS	VOLTAGE VAC	FREQ. Hz	INPUT POWER W	RPM	AIRFLOW		NOISE dB(A)	
					CFM	M³/MIN	@ 1.0m	@ 1.5m
TF120115FXAW	115	50 / 60	11 / 10	2200 / 2400	56 / 64	1.60 / 1.81	40 / 43.5	35 / 39
TF120230TXAW	230		17 / 15					

U.S. TOYO FAN CORPORATION
4915 Walnut Grove Ave.
San Gabriel, California 91776
(626) 287-5297
FAX (626) 287-7350
www.ustoyofan.com
E-mail: sales@ustoyofan.com