AC / Ball Bearing ULTRA THIN FAN — TF80RX Series

FEATURES:

- *The thinnest axial fan available - .787" (20mm) thick*
- *Low profile design - 3 $^{1}/_{18}$" square*
- *High Performance*
- *Low noise level*
- *Precision ball bearings provide long service life*
- *Durable die cast aluminum frame*
- *Impedence protected*
- *U.L. recognized - File Number E75082*
- *CSA certified - File Number 48371M2*

MATERIAL: **Frame** - Die Cast Aluminum
Black paint finish
Impeller - Black polycarbonate
Bearings - Ball bearings
WEIGHT: 0.2kg (7.0 ounces)
DIMENSIONS: Millimeters (inches)
TOLERANCES: Millimeters - .x = ± .05, .xx = ± 0.3
(Inches) --.xx = ± .02, .xxx = ±.010

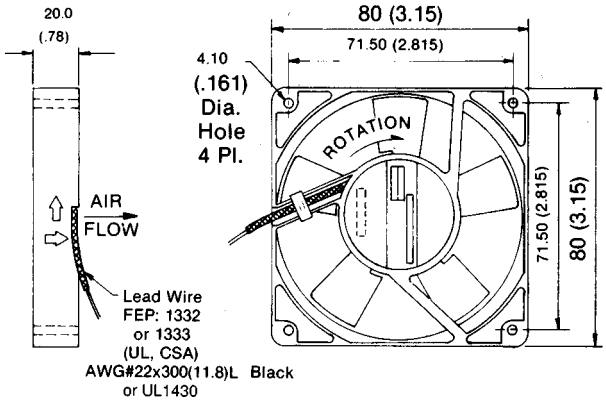

PERFORMANCE CURVES: (Obtained with test chamber and methods in accordance with AMCA Std. 210-74)

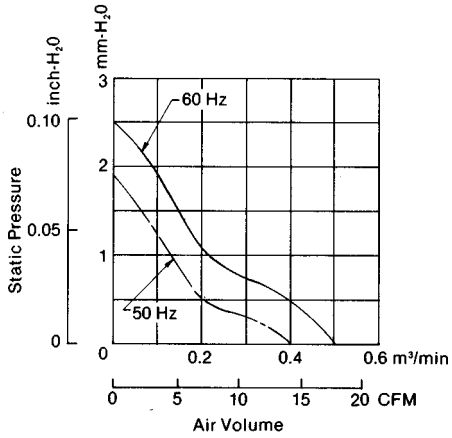

PART NUMBERS AND SPECIFICATIONS:

PART NUMBERS	VOLTAGE VAC	FREQ. Hz	INPUT POWER W	RPM	AIRFLOW		NOISE dB(A)	
					CFM	M³/MIN	@ 1.0m	@ 1.5m
TF80115FXAW	115	50 / 60	10 / 9	2100 / 2500	15 / 18	.42 / .51	32.5 / 35.5	30 / 33

U.S. TOYO FAN CORPORATION
4915 Walnut Grove Ave.
San Gabriel, California 91776
(626) 287-5297
FAX (626) 287-7350
www.ustoyofan.com
E-mail: sales@ustoyofan.com