PART NO. AND CH. CODE	⑥ W_1±0.4	⑥ W_2±0.4	⑥ H_1	⑥ H_2	A	B	WIRE SIZE	MATERIAL
7116-4020,Ⓑ ⑤(7B16-4020,Ⓑ)	2.30	3.60	(2.19)	(3.19)	3.00	6.20	AVSS 0.3~AVS 0.5 EQUIVALENT	⑨ BRASS (t=0.25)
7116-4021,Ⓑ ⑤(7B16-4021,Ⓑ)	3.00	4.50	(2.91)	(3.89)	4.00	7.20	AVS 0.5~AVS 1.25 EQUIVALENT	⑨ BRASS (t=0.25)
7116-4022,Ⓑ ⑤(7B16-4022,Ⓑ)	4.20	4.50	(4.06)	(3.89)	4.00	7.20	AVSS 2 EQUIVALENT	COPPER ALLOY (t=0.25)

注記

⑤ 1. ( ) 内品番は、エアバッグ (A/B) 回路及び特別管理回路に使用する時に適用すること。

⑥ 2. 嵌合相手品番：7114-4020 ETC. (7B14-4020)

NOTES

⑤ 1. PART NUMBERS IN PARENTHESIS SHALL BE USED FOR AIR BAG (A/B) CIRCUITS AND OTHER CIRCUITS DESIGNATED FOR SPECIAL MONITORING.

⑥ 2. MATING PART NO. :7114-4020 ETC. (7B14-4020)

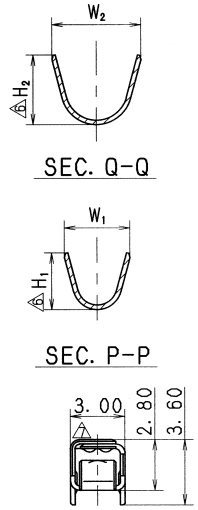

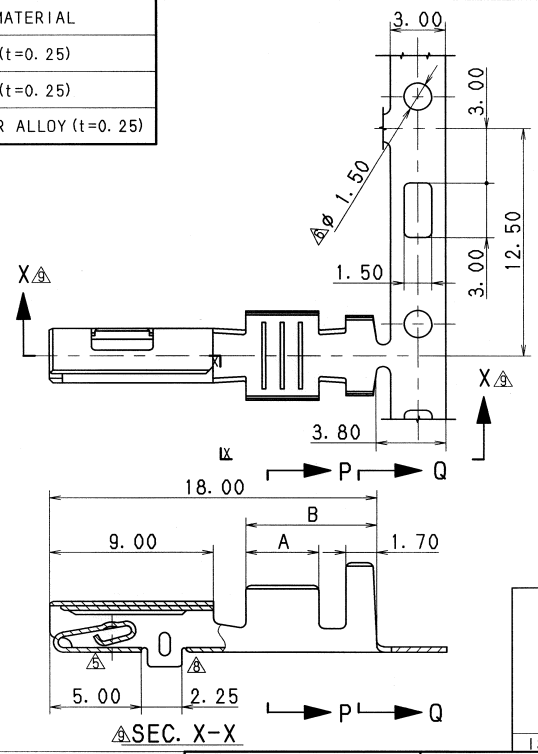

LET	DATE	REVISION RECORD	NO.	CHKD
⑨	05/11/10	CHANGED PART NAME, ETC.	C05-ZF20	T. O
⑧	01/06/07	CHANGED PART NAME & FORM, Ⓑ	C01-X544	A. T
⑦	00/11/08	CHANGED FORM & DIMENSION	C00-M342	Y. S
⑥	98/07/18	CHANGED DIMENSION & ADDED NOTE	C97-N452	H. K
⑤	96/10/28	CHANGED FORM & ADDED A/B PART NO. Ⓐ	C96-M845	H. K
④	93/02/23	RENEW	C93-6226	I. I
③	90/07/31	CHANGED FORM	C90-6983	K. O
②	90/07/02	CHANGED FORM	C90-L752	K. O
①	89/03/17	誤記訂正	C89-6441	A. H
	88/08/24	NEW	8MC-1022	A. H

GENERAL TOLERANCE

	10MAX	50MAX	100MAX	250MAX	2500VR	ANGLE	ECCENT
A	±0.15	±0.2	±0.3	±0.5	±0.75	±30′	0.1
B	±0.2	±0.3	±0.55	±0.95	±1.4	±30′	0.1
Ⓒ	±0.3	±0.5	±0.8	±1.4	±2	±30′	0.15

SPECIFIED

MASS g

CUSTOMER

CUSTOMER PART NO.

CUSTOMER DWG NO.

OFFICE

TRIAL PART NO.

VENDOR

VENDOR NO.

DWG TYPE	DWG SOURCE	DWG DATE	UNIT	SCL	ANGLE
R	NEW	93/02/23	mm	⑥ 5:1	3

APPROVED	CHECKED	CHECKED	DESIGN	DRAWN
小果	田口	室長田	M. TSUJI	O. DAR ROMEL GALIZA
'05.11.25	'05.11.24	'05.11.23 '05.11.15	87/07/27	05/11/10

ISSUE MARK

MATL. SPEC. SEE TABLE

TREAT. & FIN. TIN PLATING

NAME ⑨2.3Ⅱ TERMINAL FEMALE

PART NO. CH. CODE 7116-4020 ETC. ⑤(7B16-4020 ETC.)

DWG NO. 7116-4020:R

SET DWG NO.

YAZAKI CORPORATION