AMTEK

RCA Jack Conn.

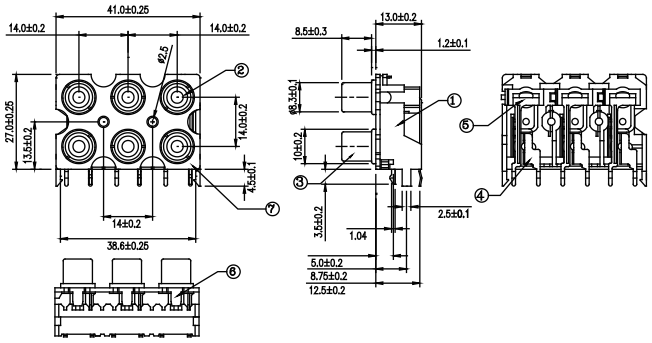

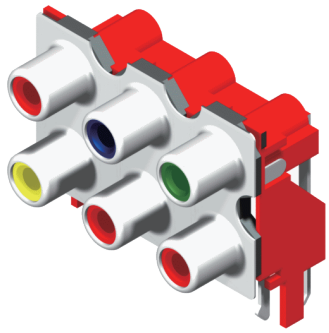

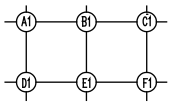

INSERT RING COLOR

Table

	RING COLOR					
Part No.	A1	B1	C1	D1	E1	F1
64RCAN2300001N1	GREEN	BULE	RED	RED	WHITE	YELLOW

NO.	NAME	MATERIAL	FINISH	Q'TY
1	HOUSING	ABS	RED	1
2	INSERT RING	P.B.T		6
3	BARREL	BRASS T:0.4	NICKEL PLATED	3
4	TERMINAL	BRASS T:0.4	TIN PLATED	3
5	TERMINAL	BRASS T:0.4	TIN PLATED	3
6	RETAINER	POM	BLACK	3
7	SPRING SHEIELD	BRASS T:0.2	NICKEL PLATED	1

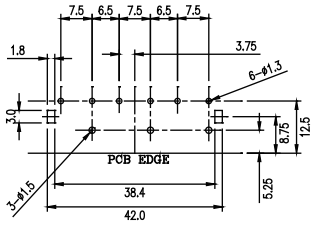

Recommended PCB Layout
(PCB TOLERANCE ±0.05)

P/N.:64RCAN-230001N1

Old P/N:RCA-1414B1S-6-L

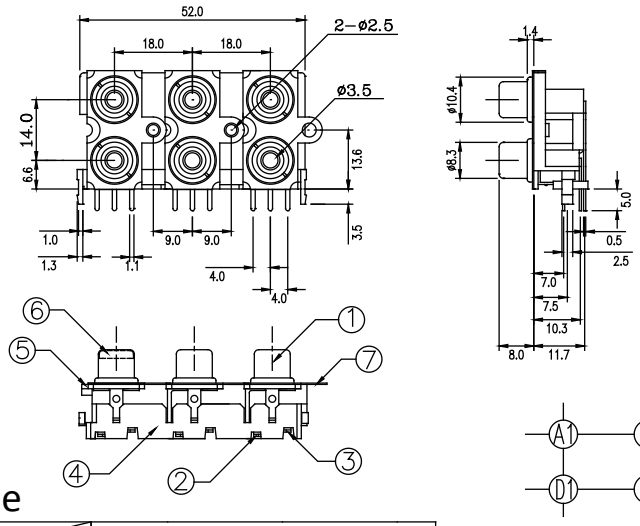

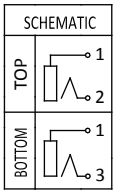

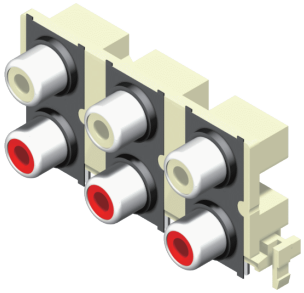

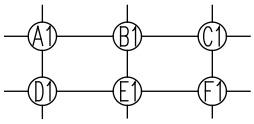

Table

	RING COLOR					
Part No.	A1	B1	C1	D1	E1	F1
64RCAN-230101N1	WHITE	WHITE	WHITE	RED	RED	RED
64RCAN-230102N1	YELLOW	WHITE	RED	YELLOW	WHITE	RED
64RCAN-230103N1	YELLOW	RED	WHITE	YELLOW	RED	WHITE
64RCAN-230104N1	BLACK	BLACK	BLACK	BLACK	BLACK	BLACK

NO.	NAME	MATERIAL	FINISH	Q'TY
1	BARREL	BRASS	NICKEL PLATED	3
2	TOP TERM.	BRASS	TIN PLATED	3
3	BOTTOM TERM.	BRASS	TIN PLATED	3
4	HOUSING	ABS	WHITE	1
5	TOP COVER	ABS	BLACK	3
6	RING	P.B.T	1,2,3,4	3
7	SHELL COVER	BRASS 0.3	NICKEL PLATED	3

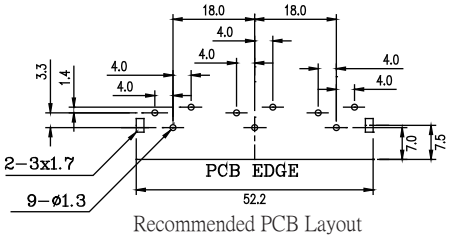

Recommended PCB Layout
(PCB TOLERANCE ±0.05)

P/N.:64RCAN-2301XXN1

Old P/N:RCA-1418-6S-L *See Table*

RCA Conn.

Pb

RoHS