嘉尼企業股份有限公司CANAL ELECTRONIC CO.,LTD.

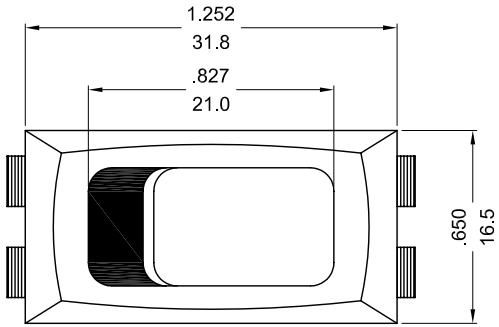

SWITCHING CIRCUIT

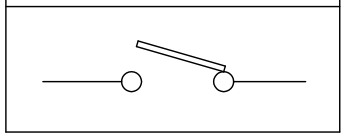

SPECIFICATION MODEL :"HB" SERIES
RATING:20A 125VAC (UL/~~CSA~~)
16A 250VAC (UL/~~CSA~~)
16(4)A 250V～T125/55 (VDE/ENEC/CQC)
WITHSTAND VOLTAGE:1,000VAC 1 MINUTE.
CONTACT RESISTANCE:20m Ω INITIAL (MAX)
INSULATION RESISTANCE: 500VDC - 100M Ω (MIN)

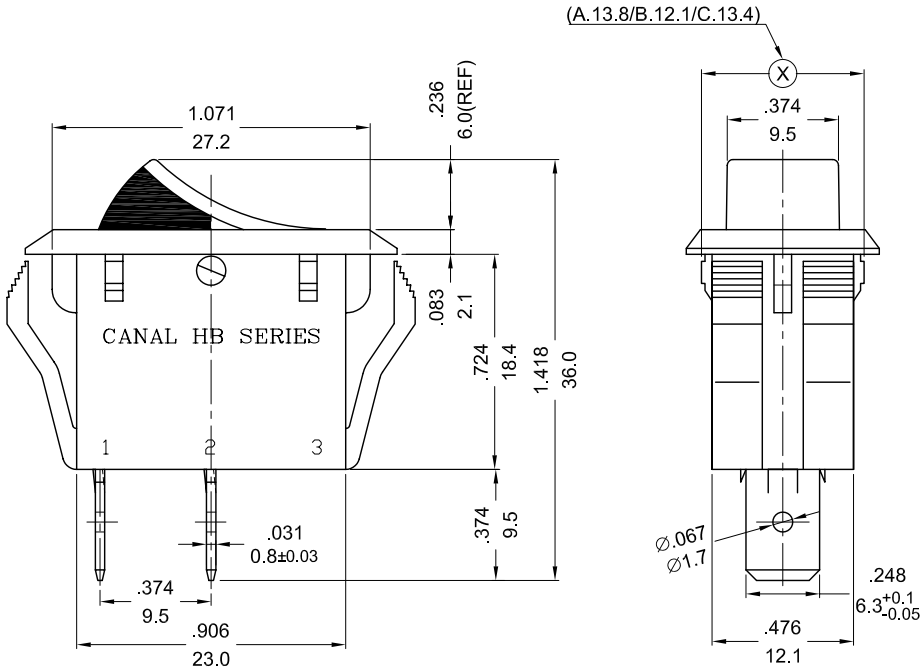

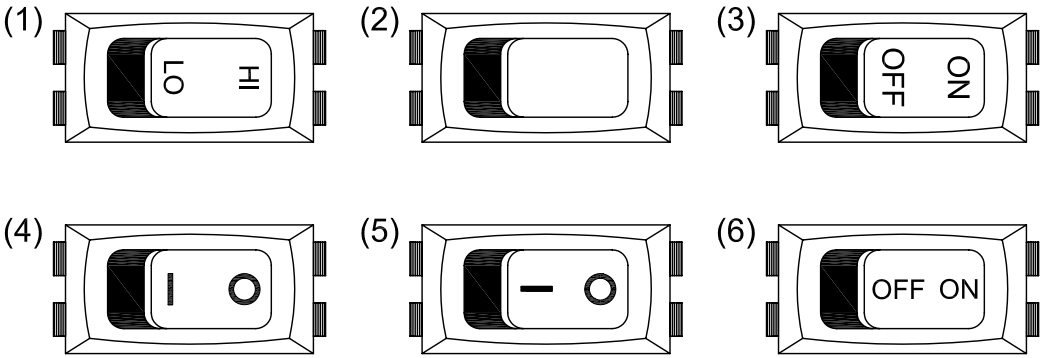

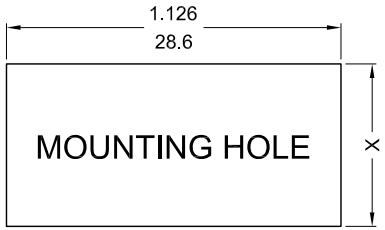

X=CUTOUT DIMENSION	
A	.547/13.9 $^{+0.1}_{-0}$ mm
B	.480/12.2 $^{+0.1}_{-0}$ mm
C	.531/13.5 $^{+0.1}_{-0}$ mm

NOTE: TOLERANCES UNLESS OTHERWISE SPECIFIED:± .012/0.3 (in/mm)

REVISION	DESCRIPTION	REVISED BY	TOLERANCES				ANGLE ½°	UNIT	mm	PART NAME	HB SPEC DRAWING	DWG NO
4			DRAWN BY	向 宏	DESIGNED BY	馮紅崗	SCALE	3/2				S4208A
3												
2			CHECKED BY	2011.06.15 10:56:19 +08'00'	APPROVED BY	2011.06.15 10:56:31 +08'00'	DATE	2011.06.14		PART NO	HB-110-C*N-BBR-(A/B/C)*C(B0B0RE)	
1 2011.06.14	首次出圖	向 宏										