嘉尼企業股份有限公司CANAL ELECTRONIC CO.,LTD.

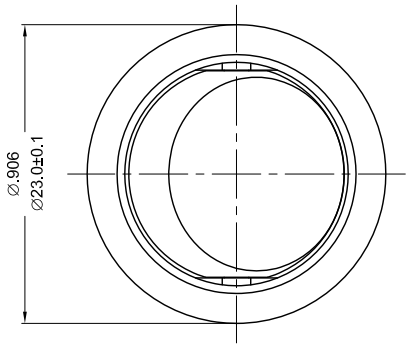

SWITCH CIRCUIT APPLICATION

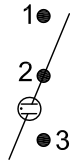

SPST
Pole on/off
illuminated

ROCKER SWITCH MODEL MR-2 SERIES

RATING:10A 125VAC, 6A 250VAC (UL/CUL)
10(4)A 250V~T125/55(ENEC 10/VDE/CQC)
DIELECTRIC VOLTAGE-WITHSTAND:1,000VAC FOR 1 MINUTE
INSULATION RESISTANCE:DC 500V 100MΩ (MIN.)
CONTACT RESISTANCE:20mΩ INITIAL (MAX.)
ILLUMINATED:100~125VAC

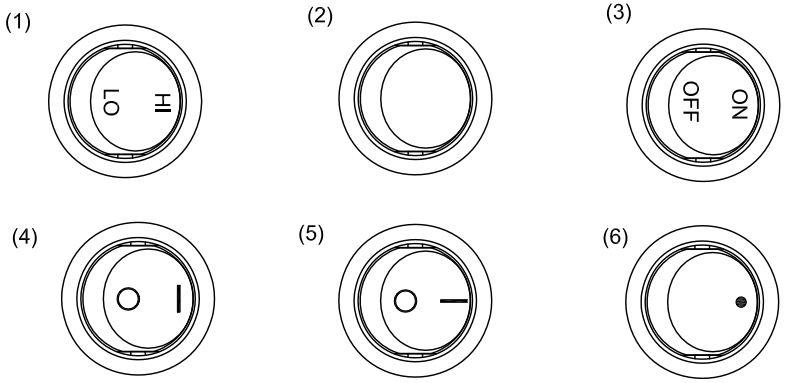

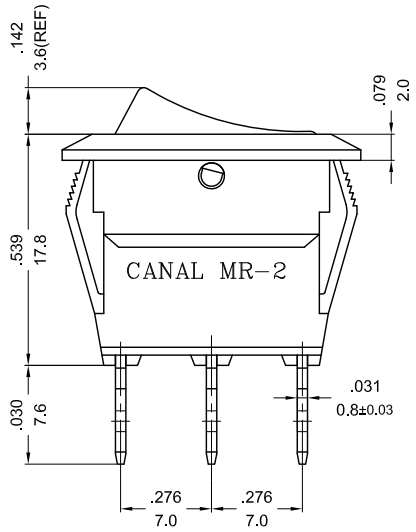

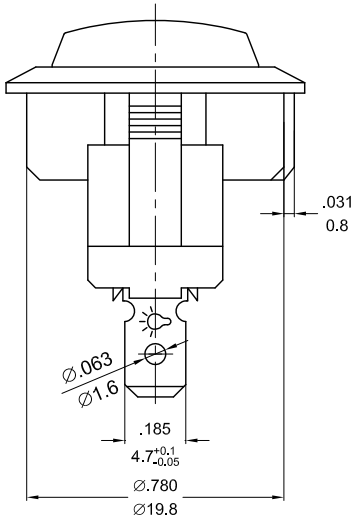

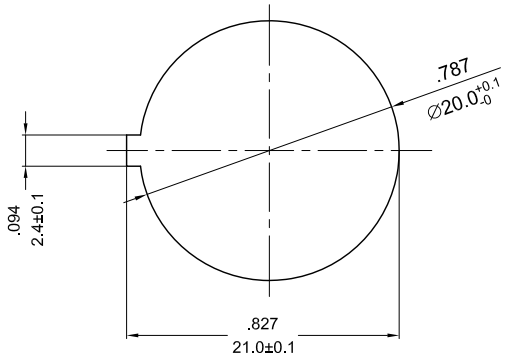

NOTE:TOLERANCES UNLESS OTHERWISE SPECIFIED:±.012/0.3 (in/mm)

PANEL THICKNESS:1.0~2.0mm

REVISION	DESCRIPTION	REVISED BY	TOLERANCES				ANGLE ½°	UNIT	mm	PART NAME	MR2 SPEC DRAWING	DWG NO
4			DRAWN BY	趙俊鵬	DESIGNED BY	蔡 劍	SCALE	5/3				S4241C
3 2013.07.09	整理圖面，重新出圖	向 宏										
2 2012.11.28	依臺北要求，增加燈的適用電壓	趙俊鵬	CHECKED BY	2013.07.09 17:14:13 +08'00'	APPROVED BY	2013.07.09 17:14:26 +08'00'	DATE	2011.07.04		PART NO	MR-2-110-R*L-**N*C	
1 2011.07.04	首次出圖	方時茂										