嘉尼企業股份有限公司CANAL ELECTRONIC CO.,LTD.

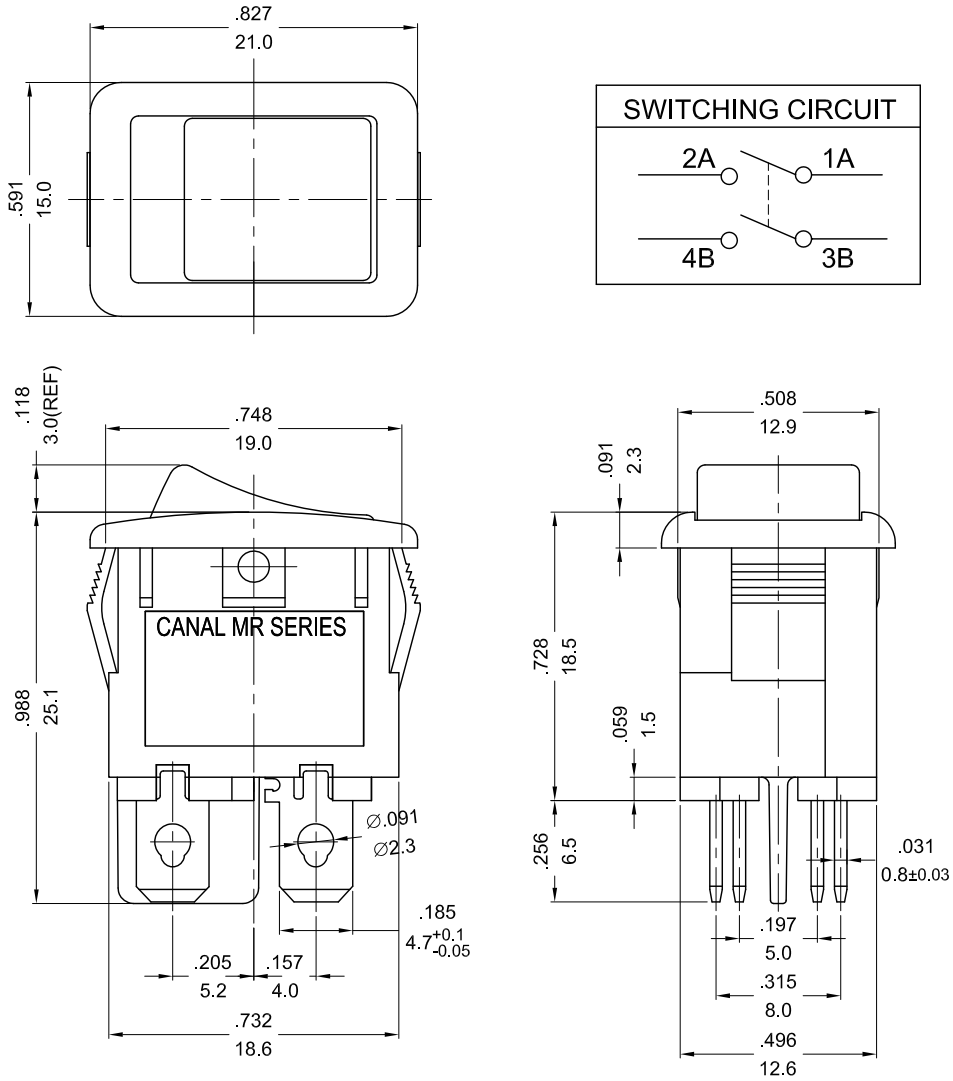

ROCKER SWITCH MODEL:MR SERIES

RATING:12(4)A 125/250V~ (cURus/ENEC15)
10(4)A 250V~T125/55(CQC)
DIELECTRIC WITHSTAND VOLTAGE:1500VAC FOR 1 MINUTE
INSULATION RESISTANCE:DC 500V 100MΩ (MIN)
CONTACT RESISTANCE: 20mΩ INITIAL (MAX)

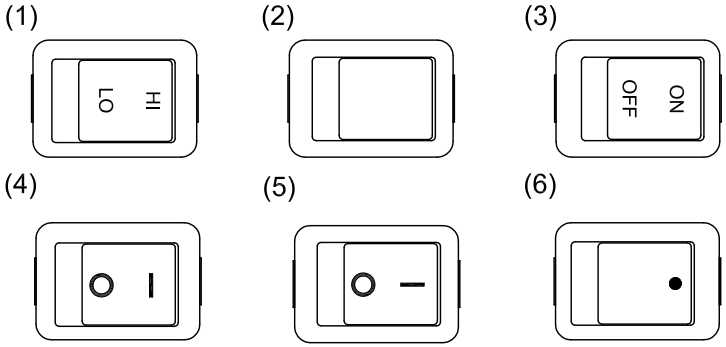

SCALE:1:1

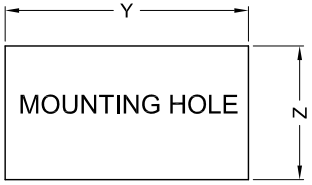

X(PANEL THICKNESS)	Y(CUTOUT DIMENSION)	Z(CUTOUT DIMENSION)
0.75~1.25mm	$19.2^{+0.1}_{-0}$ mm	$12.90^{+0.15}_{-0}$ mm
1.25~2.0mm	$19.4^{+0.1}_{-0}$ mm	$12.90^{+0.15}_{-0}$ mm
2.0~3.0 mm	$19.8^{+0.1}_{-0}$ mm	$12.90^{+0.15}_{-0}$ mm

PANEL CUTOUT DIMENSION TABLE

NOTE:TOLERANCES UNLESS OTHERWISE SPECIFIED:± .012/0.3 (in/mm)

REVISION	DESCRIPTION	REVISED BY	TOLERANCES			ANGLE ½°	UNIT	mm	PART NAME	MR SPEC DRAWING	DWG NO
4			DRAWN BY	郭洋	DESIGNED BY	蔡劍	SCALE	2/1			S5160A
3											
2			CHECKED BY	2013.04.02 15:06:03 +08'00'	APPROVED BY	2013.04.02 15:06:17 +08'00'	DATE	2013.03.22	PART NO	MR-211C**-N**B-18NC	
1 2013.03.22	依UL61058-1,首次出圖	郭洋									