嘉尼企業股份有限公司 CANAL ELECTRONIC CO.,LTD.

PBM16

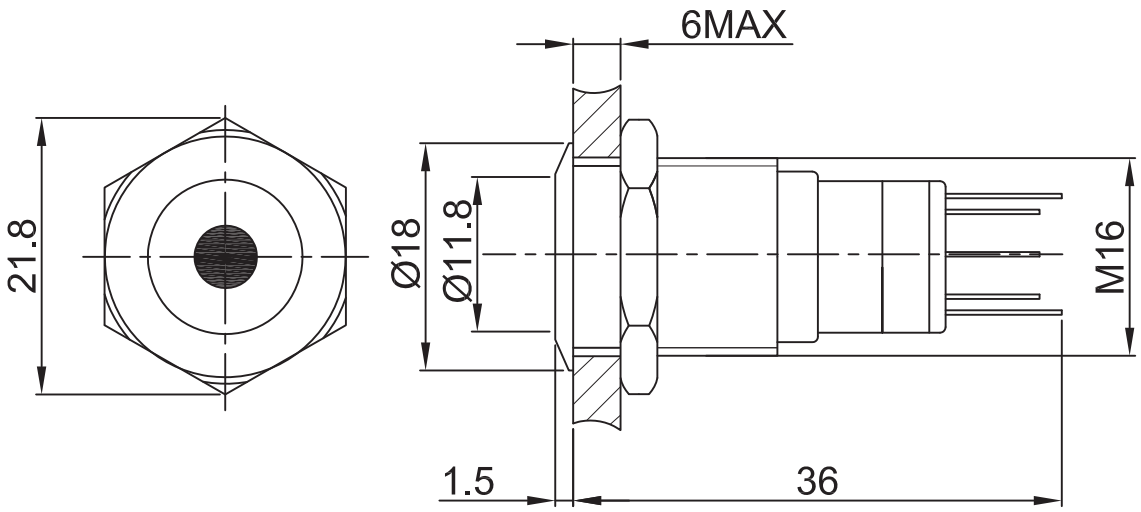

SPECIFICATIONS

Circuit	:DPDT
Current rating	:3A
Voltage rating	:250VAC
Dielectric withstanding voltage	:2000VAC for 1 minute
Contact resistance	:50mΩ Max. (Initial)
Insulation resistance	:1000MΩ Min.
Operating life	:50,000 cycles Min.
Function	:LOCK
Operating temperature	:-20° C ~ +70° C

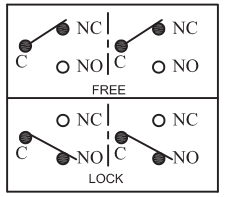

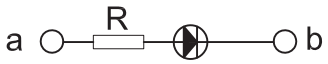

Circuit Diagram

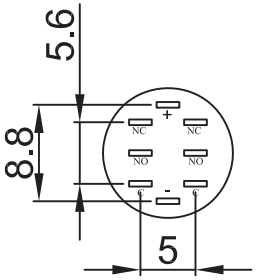

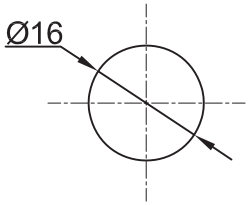

PANEL MOUNTING

MATERIAL:

Actuator: Brass,Ni plated;
Top Base: Brass,Ni plated;
Buttom Base:PBT, UL rated:94V-0 Min. ;
Terminal: Brass,Silver plated ;
Nut: Brass, Ni plated .

LED Specifications

LED 类型	双向LED灯珠（交直流通用）		
寿 命	40000小时（参考值）		
额定电压	AC/DC12V	AC/DC24V	AC/DC110V
	AC/DC36V	AC/DC48V	AC/DC220V
额定电流	约15mA		约3mA
降压方式	采用3V灯，需内置电阻		

灯发光颜色 X Emitted color X		最小	一般	最大	额定电流 (mA)
		顺向电压(V)			
W1	白色	6.0	7.5	9.5	15
U1	蓝色	6.0	7.5	9.5	15
G1	纯绿色	6.0	7.0	8.5	15
Y1	黄色	6.0	7.0	8.5	15
R1	红色	6.0	7.0	8.5	15
W	白色	3.0	3.2	3.4	15
U	蓝色	3.0	3.2	3.4	15
G	纯绿色	3.0	3.2	3.4	15
Y	黄色	1.8	2.0	2.4	15
R	红色	1.8	2.0	2.4	15

REVISION	DESCRIPION	REVISED BY
4		
3		
2		
1 2014.07.29	首次出圖	張俊雄

TOLEANCES .X .XX ANGLE ½°					UNIT	mm	PART NAME	SPEC DRAWING	DWG NO
DRAWN BY	張俊雄	DESIGNED BY	王豐文	SCALE					WS2510A
CHECKED BY	Jimmy	APPROVED BY		DATE	2014.07.29		PART NO	PBM16-23Z-FS-S##-SN-S	