嘉尼企業股份有限公司CANAL ELECTRONIC CO.,LTD.

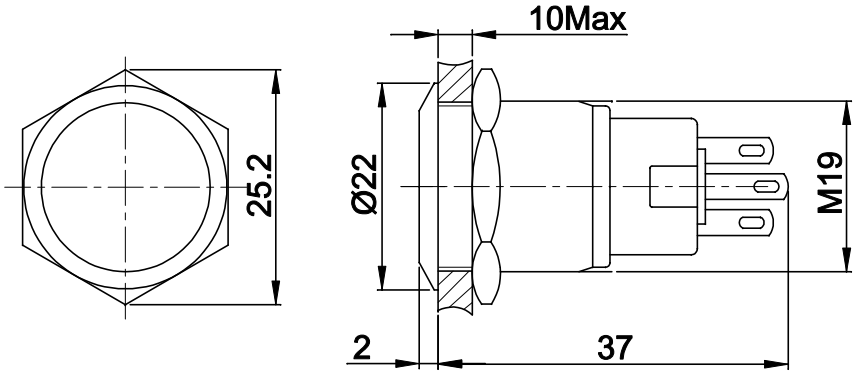

SPECIFICATIONS

Circuit	:DPDT
Current rating	:5A
Voltage rating	:250VAC
Dielectric withstanding voltage	:2000VAC for 1 minute
Contact resistance	:50mΩ Max. (Initial)
Insulation resistance	:1000MΩ Min.
Operating life	:50,000 cycles Min.
Operating temperature	:-20° C ~ +70° C

MATERIAL:

Actuator: Brass,Cr plated;
Top Base: Brass,Cr plated;
Buttom Base:PBT, UL rated:94V-0 Min. ;
Terminal: Brass,Silver or Gold plated ;
Nut: Brass, Ni plated .

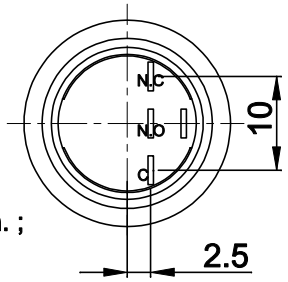

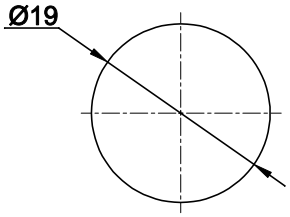

PANEL MOUNTING

Circuit Diagram

NOTE:TOLERANCES UNLESS OTHERWISE SPECIFIED: ± .012/0.3 (in/mm)

REVISION	DESCRIPTION	REVISED BY	TOLERANCES			ANGLE ½°		UNIT	mm	PART NAME	SPEC DRAWING	DWG NO
4			DRAWN BY	張俊雄	DESIGNED BY	王豐文	SCALE	1/1				WS2449A
3												
2			CHECKED BY	Jimmy	APPROVED BY		DATE	2014.05.16		PART NO	PBM19-13M-FS-NNN-SN-S	
1 2014.05.16	首次出圖	張俊雄										