嘉尼企業股份有限公司CANAL ELECTRONIC CO.,LTD.

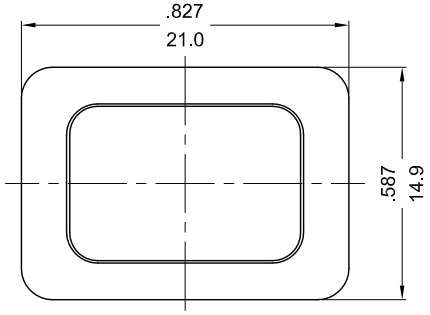

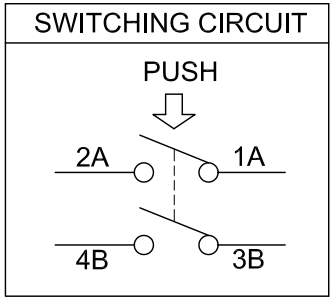

SPECIFICATION MODEL :"PS-5" SERIES

RATING:16A 125/250VAC (UL/CUL)
16(4)A 250V ~ T125/55 (ENEC/VDE,CQC)
CONTACT RESISTANCE:20mΩ INITIAL (MAX)
INSULATION RESISTANCE:500VDC 100MΩ (MIN)
WITHSTAND VOLTAGE:1,000VAC FOR 1 MINUTE

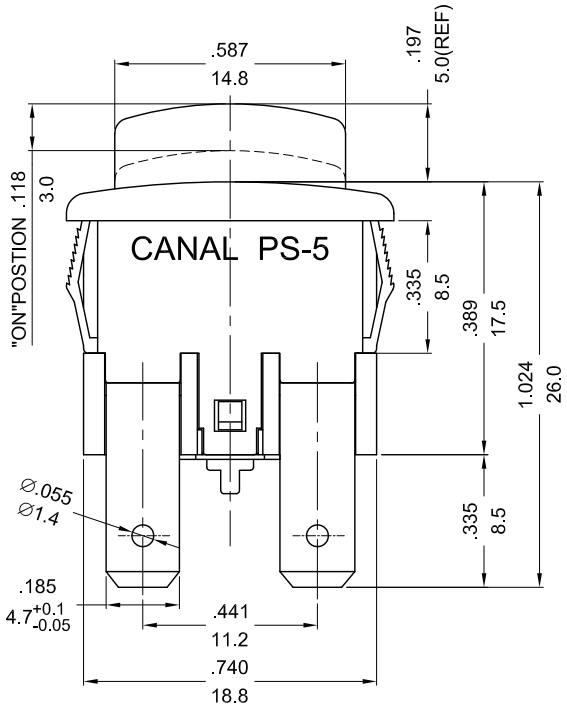

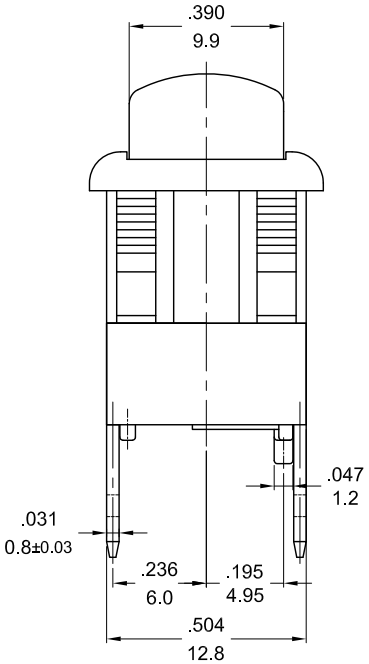

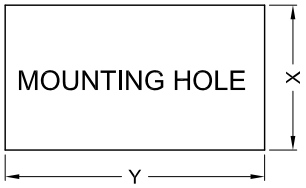

X=panel thickness	Dim.Y	Dim.z
0.75~1.25mm	$19.2^{+0}_{-0.1}$mm	$12.9^{+0.15}_{-0}$ mm
1.25~2mm	$19.4^{+0}_{-0.1}$mm	$12.9^{+0.15}_{-0}$ mm
2~3mm	$19.8^{+0}_{-0.1}$mm	$12.9^{+0.15}_{-0}$ mm

NOTE:TOLERANCES UNLESS OTHERWISE SPECIFIED:± .012/0.3 (in/mm)

REVISION	DESCRIPTION	REVISED BY	TOLERANCES				ANGLE $\frac{1}{2}$°	UNIT	mm	PART NAME	PS-5 SPEC DRAWING	DWG NO
4			DRAWN BY	鄒紅海	DESIGNED BY	鄒紅海	SCALE	2/1				S0374C
3 2012.10.26	依最新出圖方式整理圖面	向 宏										
2 2010.05.26	整理圖面，重新出圖	鄒年勝	CHECKED BY		APPROVED BY		DATE	2003.06.28		PART NO	PS-5-210-PN**-S	
1 2004.05.24	更換圖框，首次出圖	蔡 劍										