嘉尼企業股份有限公司CANAL ELECTRONIC CO.,LTD.

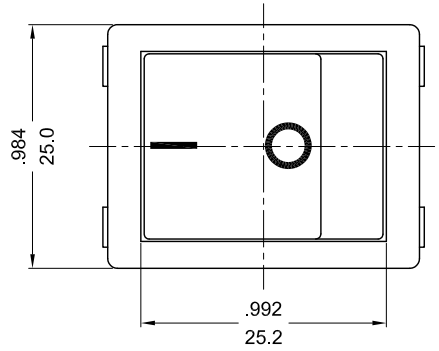

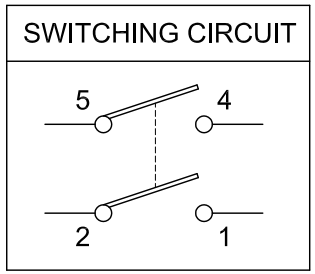

ROCKER SWITCH MODEL: R SERIES

RATING:(1) 16A 125/250VAC (UL/CUL)
(2) 20A 125VAC (UL/CUL)
(3) 16(4)A 250V~T125/55 (VDE/ENEC10/CQC)
DIELECTRIC WITHSTAND VOLTAGE: 1000VAC 1 MIN
INSULATION RESISTANCE:500VDC 100MΩ(MIN)
CONTACT RESISTANCE:20mΩ INITIAL(MAX.)

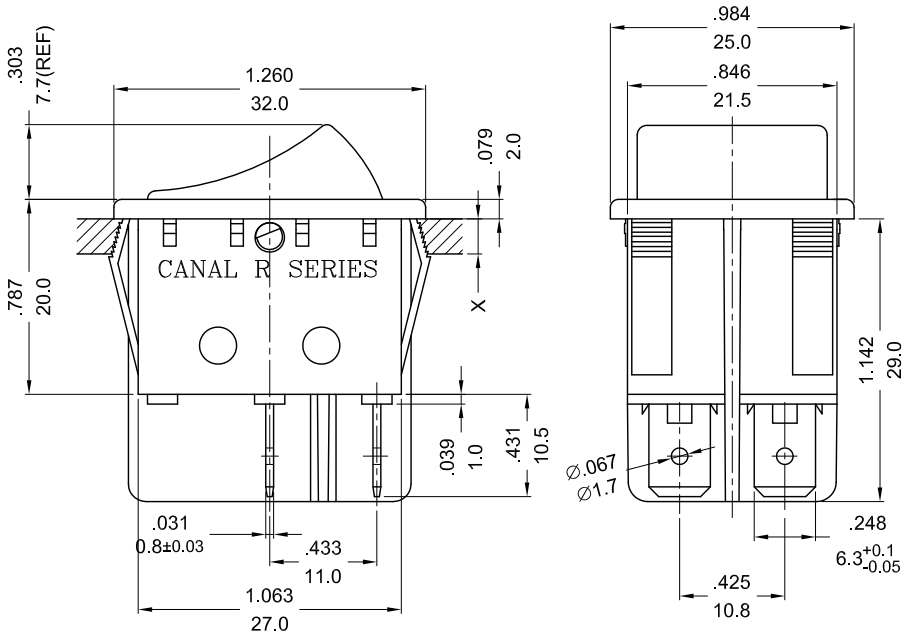

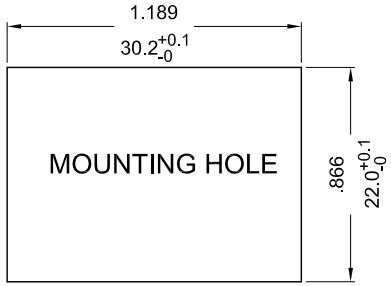

X=(1.25~2.0mm)
PANEL THICKNESS

NOTE:TOLERANCES UNLESS OTHERWISE SPECIFIED:±.012/0.3(in/mm)

REVISION	DESCRIPTION	REVISED BY	TOLERANCES				ANGLE ½°	UNIT	mm	PART NAME	R SPEC DRAWING	DWG NO
4			DRAWN BY	鄒年勝	DESIGNED BY	戴德建	SCALE	5/4				S3441C
3 2013.04.02	修正品名，重新出圖	向 宏										
2 2013.01.09	整理圖面，重新出圖	袁友軍	CHECKED BY	2013.04.07 14:55:19 +08'00'	APPROVED BY	2013.04.07 14:55:28 +08'00'	DATE	2010.03.03		PART NO	R210-1C5N-BB1-NWC	
1 2010.03.03	首次出圖	鄒處勝										