嘉尼企業股份有限公司CANAL ELECTRONIC CO.,LTD.

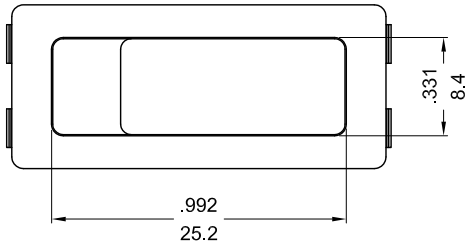

SWITCHING CIRCUIT

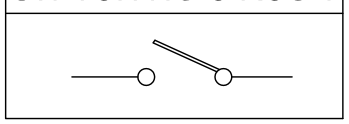

ROCKER SWITCH MODEL:RH SERIES
RATING:(1) 16A 125/250VAC (UL/CUL)
(2) 20A 125VAC (UL/CUL)
(3) 16(4)A 250V~T125/55 (VDE/ENEC10/CQC)
DIELECTRIC WITHSTAND VOLTAGE: 1000VAC 1 MINUTE
INSULATION RESISTANCE: 500VDC 100M Ω (MIN)
CONTACT RESISTANCE: 20m Ω INITIAL (MAX.)

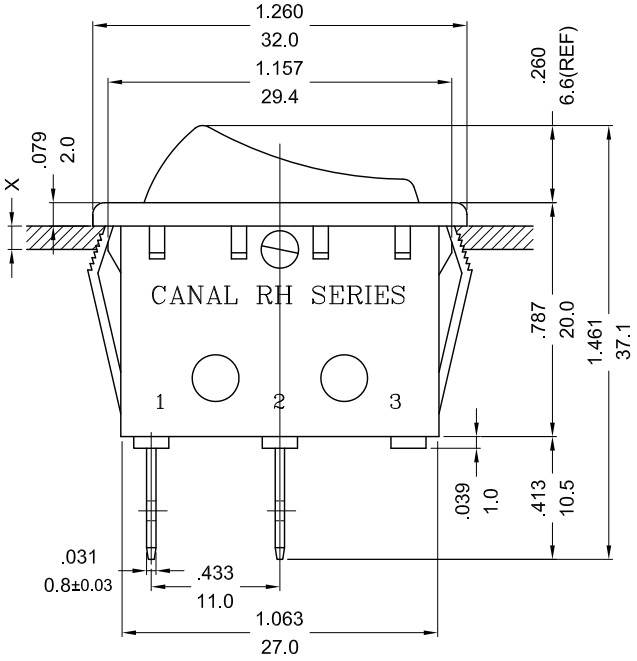

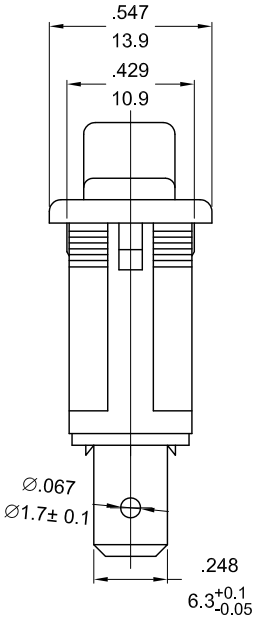

X=panel thickness	Dim.Y	Dim.Z
0.75 ~ 1.25 mm	30.0 $^{+0.1}_{-0}$	11.0 $^{+0.1}_{-0}$
1.25 ~ 2 mm	30.2 $^{+0.1}_{-0}$	11.0 $^{+0.1}_{-0}$
2 ~ 3 mm	30.5 $^{+0.1}_{-0}$	11.0 $^{+0.1}_{-0}$

NOTE: TOLERANCES UNLESS OTHERWISE SPECIFIED:± .012/0.3 (in/mm)

REVISION	DESCRIPTION	REVISED BY	TOLERANCES				ANGLE ½°	UNIT	mm	PART NAME	RH SPEC DRAWING	DWG NO
4			DRAWN BY	向 宏	DESIGNED BY	聶明	SCALE	3/2				S5484A
3												
2			CHECKED BY	2013.12.17 11:40:03 +08'00'	APPROVED BY	2013.12.17 11:40:19 +08'00'	DATE	2013.12.17		PART NO	RH110-C2N-**N-NC	
1 2013.12.17	首次出圖	向 宏										