嘉尼企業股份有限公司 CANAL ELECTRONIC CO.,LTD

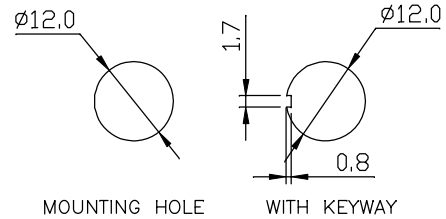

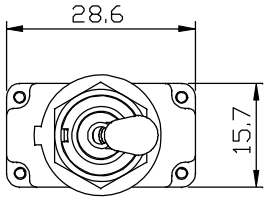

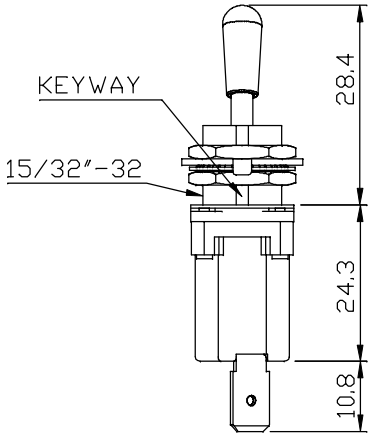

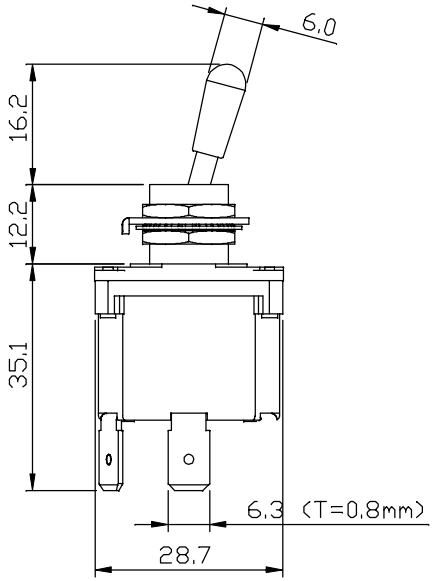

Specification :

Contact resistance: 20m ohm max. (initial)
Insulation resistance: 100M ohm min. (at 500V DC)
Dielectric strength: 1,500V AC 50/60 Hz for 1 minute
Service life: Mechanically: 100,000 operations min.
Electrically: 30,000 operations min.

Waterproof rating: IP68 level

Rating : 12A 125VAC/250VAC
½HP 125VAC/1HP 250VAC/5A 125VAC "L"

Circuit: OFF - ON SPST

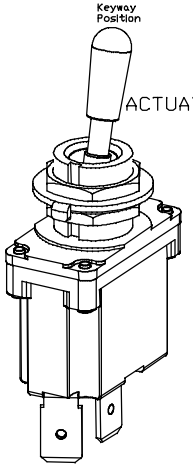

ACTUATOR: BRASS WITH DULL NICKLE PLATED

KAR-TECH
ON-OFF
12A 125V AC
10A 250V AC
1/2HP 125V AC
1HP 250V AC
5A 125V AC"L"
2

REVISION	DESCRIPION	REVISED BY	TOLEANCES .X .XX ANGLE ½°					UNIT mm	PART NAME	TB SPEC DRAWING	DWG NO
△			DRAWN BY	Jelly	DESIGNED BY	蔡劍	SCALE	2/1			WS1494A
△											
2 2011.04.11	增加印字內容	Jelly	CHECKED BY	Jing	APPROVED BY		DATE	2011.03.24	PART NO	TB2-B12	
1 2011.03.24	新增規格,首次出圖	Jelly									