嘉尼企業股份有限公司CANAL ELECTRONIC CO.,LTD.

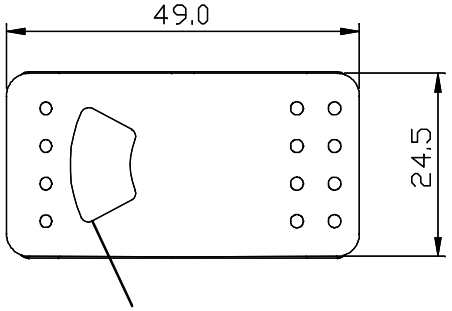

Bule Led

SWITCHING CIRCUIT:

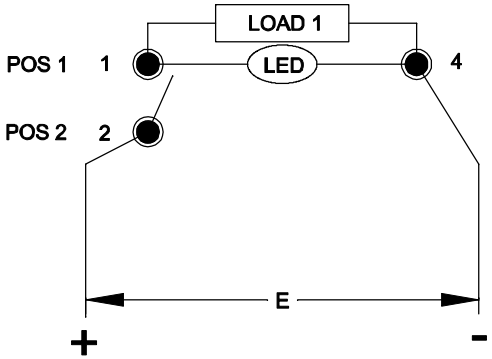

ROCKER SWITCH MODEL: X5 SERIES

RATING:16A DC30V~ μT55 (cURus/ENEC15)
DIELECTRIC WITHSTAND VOLTAGE:1500VAC FOR 1 MINUTE
INSULATION RESISTANCE:DC 500V 100MΩ (MIN)
CONTACT RESISTANCE: 20mΩ INITIAL (MAX)
ILLUMINATION: DC 12V

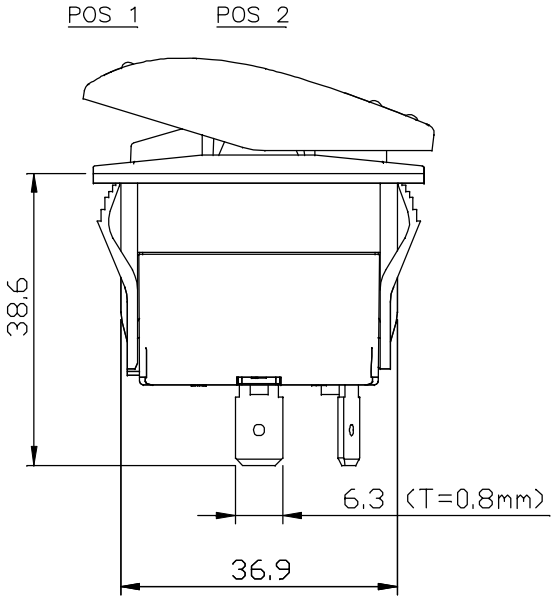

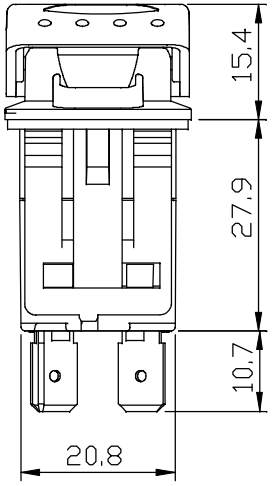

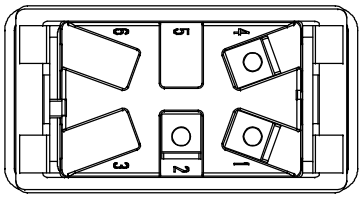

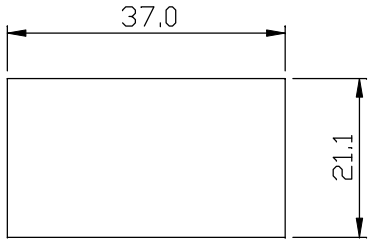

Panel Cutout

NOTE:TOLERANCES UNLESS OTHERWISE SPECIFIED: ± .012/0.3 (in/mm)

REVISION	DESCRIPTION	REVISED BY	TOLERANCES				ANGLE ½°	UNIT	mm	PART NAME	X5 SPEC DRAWING	DWG NO
4			DRAWN BY	張俊雄	DESIGNED BY	王豐文	SCALE	1/1				WS2250A
3												
2			CHECKED BY		APPROVED BY		DATE	2013.07.17		PART NO	X5-114ENN-1ABD-5U	
1 2013.07.17	首次出圖	張俊雄										