嘉尼企業股份有限公司CANAL ELECTRONIC CO.,LTD.

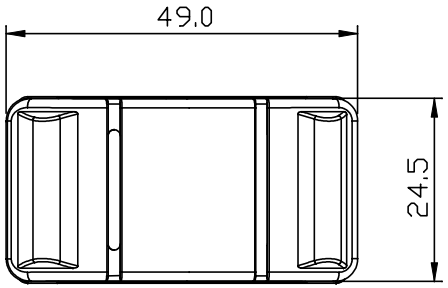

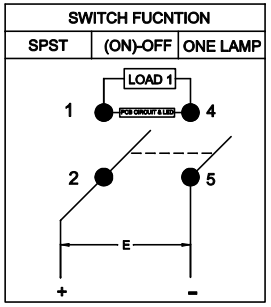

ROCKER SWITCH MODEL: X5 SERIES

RATING:16A DC30V~ T55 (cURus/ENEC15)

DIELECTRIC WITHSTAND VOLTAGE:1500VAC FOR 1 MINUTE

INSULATION RESISTANCE:DC 500V 100MΩ (MIN)

CONTACT RESISTANCE: 20mΩ INITIAL (MAX)

ILLUMINATION: DC12V

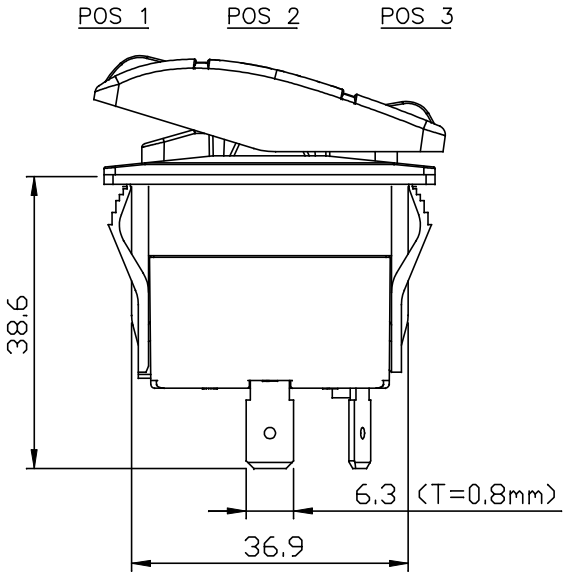

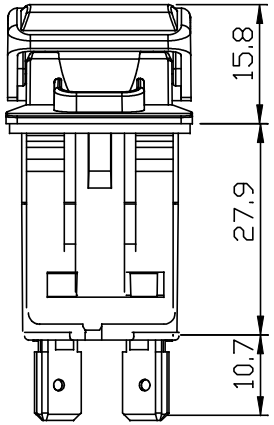

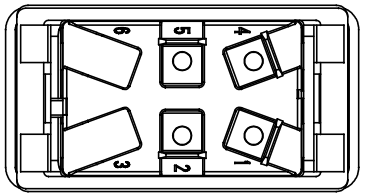

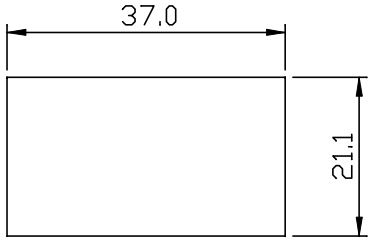

Panel Cutout

NOTE:TOLERANCES UNLESS OTHERWISE SPECIFIED: ± .012/0.3 (in/mm)

REVISION	DESCRIPTION	REVISED BY	TOLERANCES				ANGLE ½°	UNIT	mm	PART NAME	X5 SPEC DRAWING	DWG NO
4			DRAWN BY	張俊雄	DESIGNED BY	王豐文	SCALE	1/1				WS2426A
3												
2			CHECKED BY	Jimmy	APPROVED BY		DATE	2014.05.05		PART NO	X5-244DNN-1ABD-2GN	
1 2014.05.05	首次出圖	張俊雄										