嘉尼企業股份有限公司CANAL ELECTRONIC CO.,LTD.

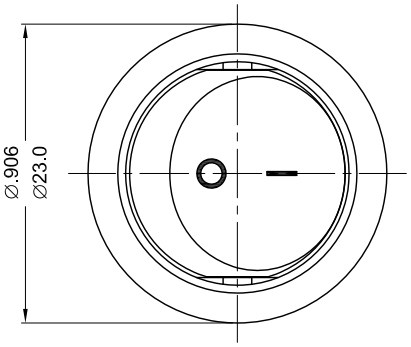

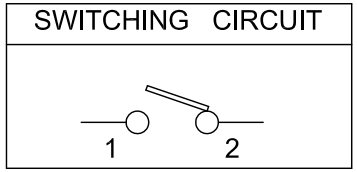

ROCKER SWITCH MODEL MR-2 SERIES

RATING: 20A 125VAC, 12A 250VAC (UL/CUL)

16(8)A 250V~ T85 (VDE/ENEC/CQC)

DIELECTRIC VOLTAGE-WITHSTAND:1,000VAC FOR 1 MINUTE

INSULATION RESISTANCE: 500VDC 100MΩ (MIN.)

CONTACT RESISTANCE:20mΩ INITIAL (MAX.)

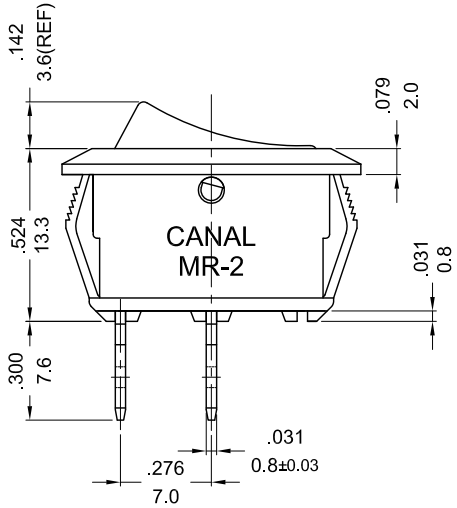

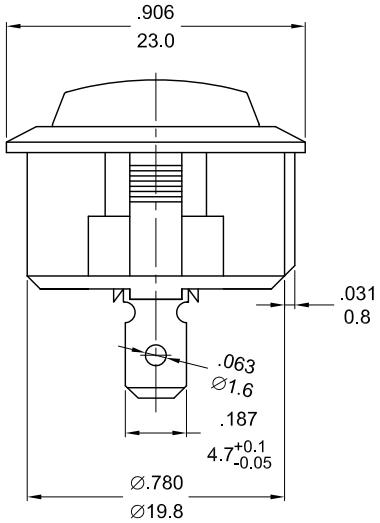

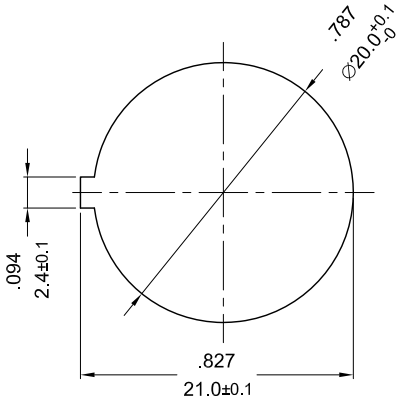

PANEL CUTOUT DIMENSION TABLE

NOTE:TOLERANCES UNLESS OTHERWISE SPECIFIED: ± 0.012/0.3 (in/mm)

REVISION	DESCRIPTION	REVISED BY	TOLERANCES				ANGLE ½°	UNIT	mm	PART NAME	MR-2 SERIES SPEC DRAWING	DWG NO
4			DRAWN BY	陸杰	DESIGNED BY	馮紅崗	SCALE	5 : 3				S4565A
3												
2			CHECKED BY	2012.01.11 16:40:17 +08'00'	APPROVED BY	2012.01.11 16:40:29 +08'00'	DATE	2012.01.06		PART NO	MR-2-110-R5-BB-6NW	
1 2012.01.06	首次出圖	陸杰										