嘉尼企業股份有限公司CANAL ELECTRONIC CO.,LTD.

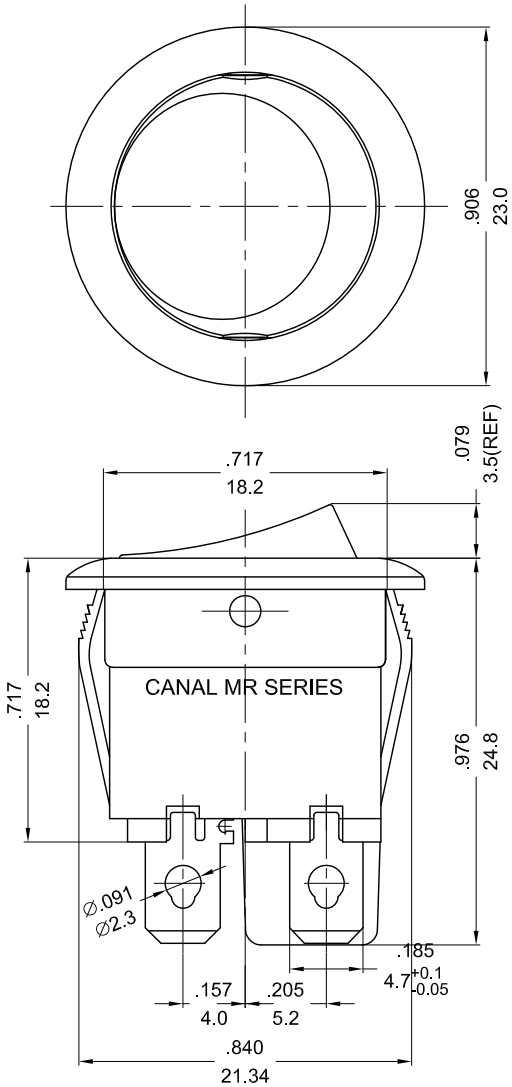

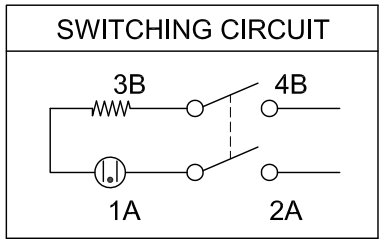

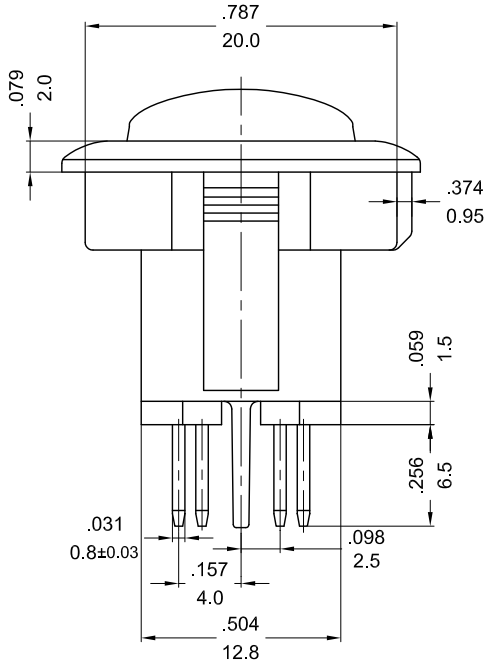

ROCKER SWITCH MODEL:MR SERIES

RATING:12(4)A 125/250V~ (cURus/ENEC15)
10(4)A 250V~T125/55(CQC)
DIELECTRIC WITHSTAND VOLTAGE:1500VAC FOR 1 MINUTE
INSULATION RESISTANCE:DC 500V 100MΩ (MIN)
CONTACT RESISTANCE: 20mΩ INITIAL (MAX)
ILLUMINATED100~125VAC

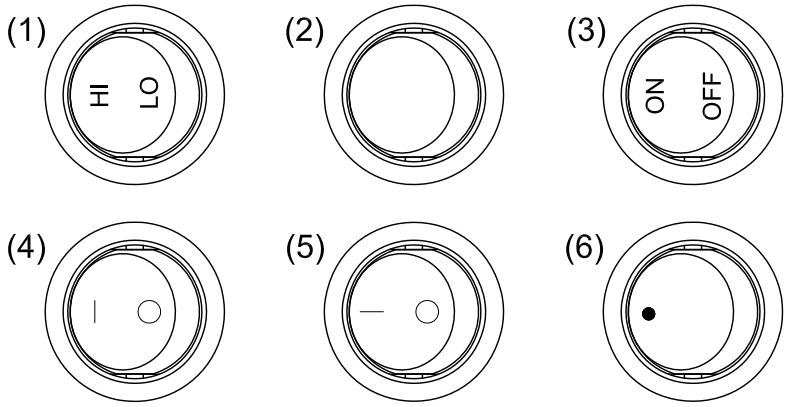

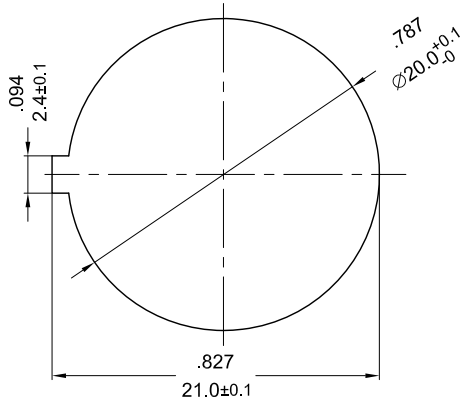

NOTE:TOLERANCES UNLESS OTHERWISE SPECIFIED:± .012/0.3 (in/mm)

PANEL THICKNESS:1.0~2.0mm

REVISION	DESCRIPTION	REVISED BY	TOLERANCES			ANGLE ½°	UNIT	mm	PART NAME	MR SPEC DRAWING	DWG NO
4			DRAWN BY	郭洋	DESIGNED BY	蔡劍	SCALE	2/1			S5164A
3			CHECKED BY	2013.04.02 15:30:57 +08'00'	APPROVED BY	2013.04.02 15:31:07 +08'00'	DATE	2013.03.22	PART NO	MR-211R**-L**B-12NC	
1 2013.03.22	依UL61058-1, 首次出圖	郭洋									