嘉尼企業股份有限公司CANAL ELECTRONIC CO.,LTD.

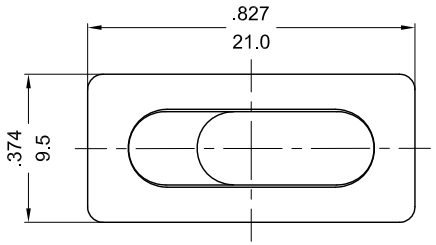

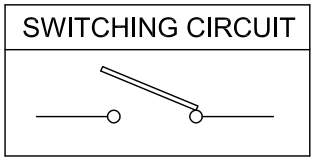

ROCKER SWITCH MODEL MR SERSIE

RATING: 12(4)A 125/250V~ (cURus, ENEC15)
10(4)A 250V~T125/55 (CQC)
DIELECTRIC WITHSTAND VOLTAGE:1500VAC FOR 1 MINUTE
INSULATION RESISTANCE:500VDC 100MΩ (MIN.)
CONTACT RESISTANCE: 20mΩ INITIAL(MAX.)

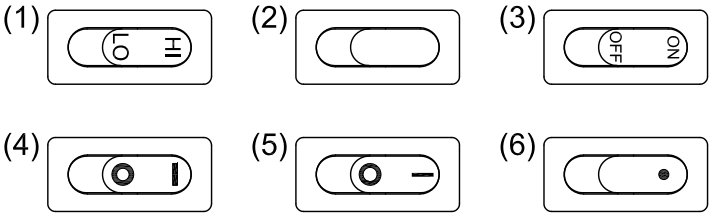

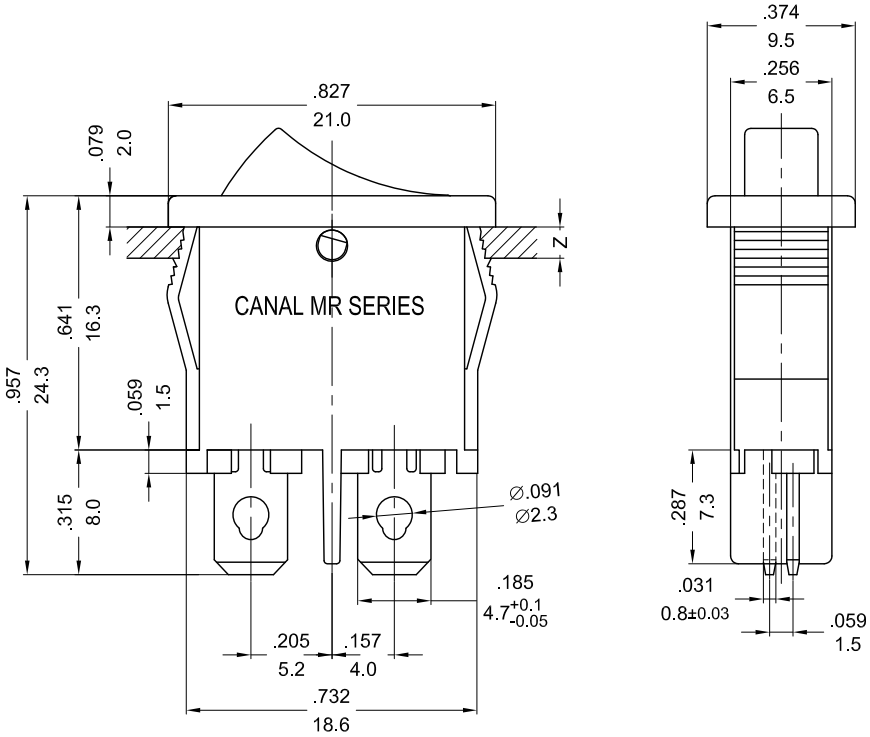

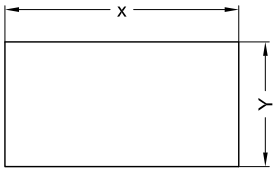

PANEL CUTOUT DIMENSION TABLE

X(CUTOUT DIMENSION)	Y(CUTOUT DIMENSION)	Z(PANEL THICKNESS)
19.2 $^{+0.15}_{-0}$ mm	6.65~6.75mm	0.75~1.25mm
19.4 $^{+0.15}_{-0}$ mm	6.65~6.75mm	1.25~2mm
19.8 $^{+0.15}_{-0}$ mm	6.65~6.75mm	2~3mm

NOTE: TOLERANCES UNLESS OTHERWISE SPECIFIED: ± .012/0.3 (in/mm)

MODEL NO, SEE NUMBER SYSTEM

REVISION	DESCRIPTION	REVISED BY	TOLERANCES			ANGLE $\frac{1}{2}^\circ$		UNIT	mm	PART NAME	MR SPEC DRAWING	DWG NO
4			DRAWN BY	郭洋	DESIGNED BY	蔡劍	SCALE	2/1				S5171A
3												
2			CHECKED BY	2013.04.02 15:42:57 +08'00'	APPROVED BY	2013.04.02 15:43:22 +08'00'	DATE	2013.03.07		PART NO	MR-H11C**-N**B-17NC	
1 2013.03.07	依UL61058-1首次出圖	郭洋										