嘉尼企業股份有限公司CANAL ELECTRONIC CO.,LTD.

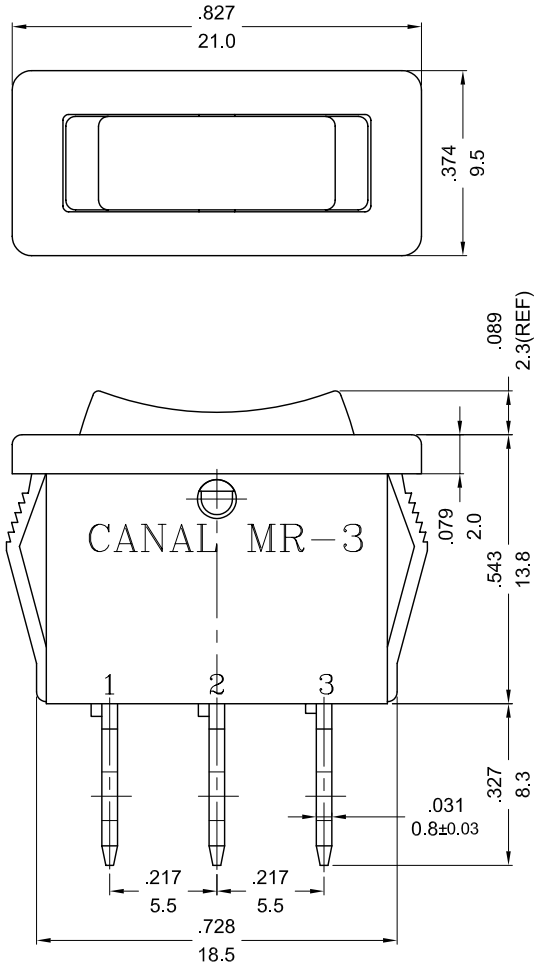

SWITCHING CIRCUIT

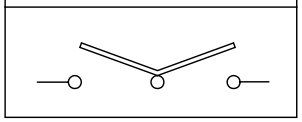

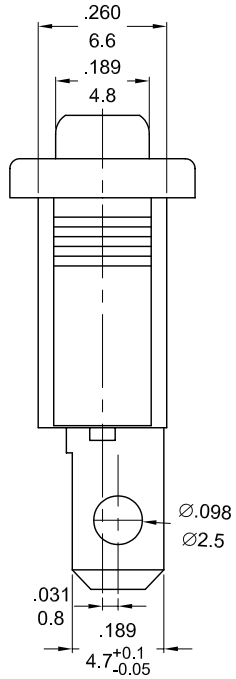

ROCKER SWITCH MODEL MR-3-H (HAIF SIZE)
RATING: 10A 125/250VAC (UL)
13A 125VAC, 10A 250VAC(CSA)
10(4)A 250V~ T85 (FI/ENEC)
CIRCUIT:SINGLE POLE DOUBLE THROW
DIELECTRIC STRENGTH:1000VAC 1 MINUTE.
INSULATION RESISTANCE:500VDC 100MΩ (MIN)
CONTACT RESISTANCE:20mΩ INITIAL (MAX)

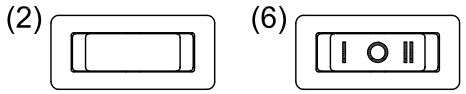

SCALE:1/1

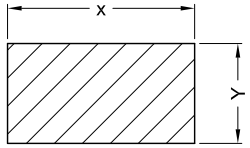

PANEL CUTOUT DIMENSION TABLE

X(CUTOUT DIMENSION)	Y(CUTOUT DIMENSION)	Z(PANEL THICKNESS)
$19.2^{+0}_{-0.15}$	6.65~6.75mm	0.75~1.25mm
$19.4^{+0}_{-0.15}$	6.65~6.75mm	1.25~2mm
$19.8^{+0}_{-0.15}$	6.65~6.75mm	2~3mm

MODEL NO, SEE NUMBER SYSTEM

NOTE:TOLERANCES UNLESS OTHERWISE SPECIFIED:$\pm\frac{.012}{0.3}$ (in/mm)

REVISION	DESCRIPTION	REVISED BY	TOLERANCES				ANGLE $\frac{1}{2}^\circ$	UNIT	mm	PART NAME	MR3-H SPEC DRAWING	DWG NO
4			DRAWN BY	吳美玉	DESIGNED BY	吳美玉	SCALE	5/2				S1099B
3												
2 2011.04.13	整理圖面，重新出圖	向 宏	CHECKED BY	2011.04.14 08:09:05 +08'00'	APPROVED BY	2011.04.14 08:09:17 +08'00'	DATE	2004.08.21		PART NO	MR3-H31-C*-**N	
1 2004.08.21	首次出圖	吳美玉										