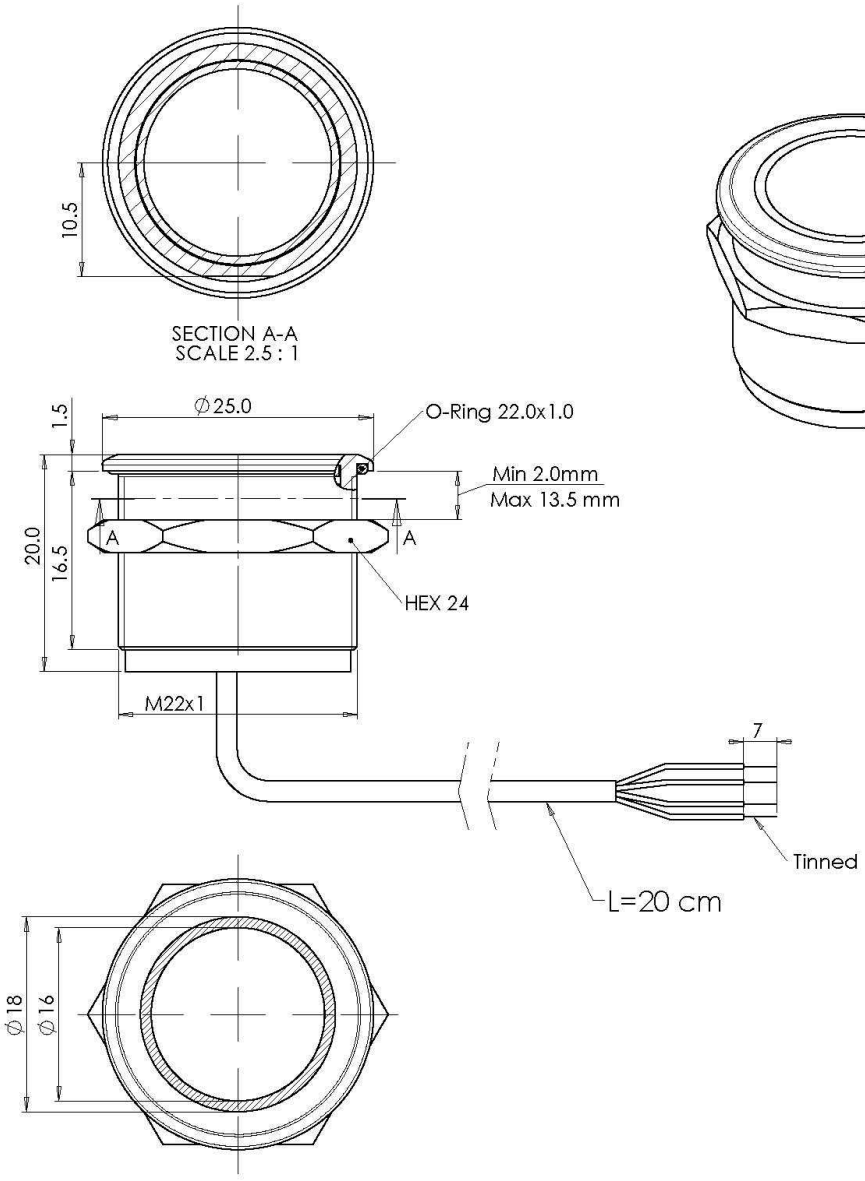

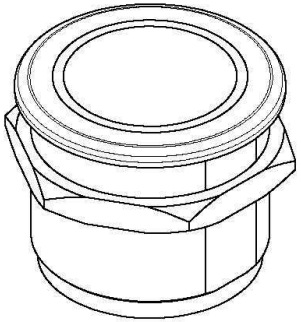

Manufactured by Stern Engineering
P/N 07225196
-Switch voltage 0-24 V AC/DC
-Switch current 1A
-Green illuminated 24V AC/DC

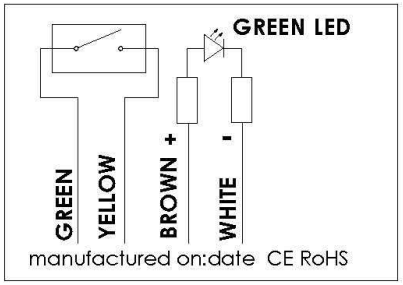

NOTES:
1. Material: AISI 303
2. Rated Voltage: (0-24 V AC/DC)
   Rated Current: max 1A
   Switch Resistance "On" : (<1 Ohm)
   Switch Resistance "Off" : (> 5 Megaohms)
   Switch Capacitance : (100pF)
   Overvoltage protection 34 V DC
   Impulse Time : 300mSEC
   Actuation Force Typically : (3-5 N)
   Climate data: -40C to +85C per MIL STD 810G
   Operating cycle : (>10 million)
3. Green illuminated 24V AC/DC
4. IP protection: IP68 per IEC 60529; IP69K per DIN 40050-9
5. Mechanical shock : 75g per MIL STD 810G
6. Vibration: 5-500Hz/9.4m/s2 per IEC 60721
7. Potting:Epoxy Resin Silicone Free

All Dimensions in: mm	Code:							Scale 2:1	Weight
								Material	
								Description	
								BPSSN22PGFG1	
2	13300	Update assembly	Sasha	19.08.13	Engineer				
1	13198	Update after lab tests	Sasha	26.05.13	Draftsman	Sasha	01.08.13		
No	ECO	Description	Name	Date	Checked	Gabriel	01.08.13	Cat.no 07225196	
					Approval				
Next assy		Finish	IBS ELECTRONICS					Revision 02	Drawing no. P33-12.00.00
								Sheet 1 of 1	A3

TOLERANCES UNLESS OTHERWISE SPECIFIED
.XX ± 0.1
.X ± 0.2
X. ± 0.5
ANG ± 1.5%

THIS DRAWING OR DESIGN ARE DETAILS THE PROPERTY OF STERN ENG. AND MAY NOT BE USED EXCEPT IN CONNECTION WITH STERN ENGINEERING. ALL RIGHTS OF DESIGN OR INVENTION ARE RESERVED.

Printed: 19/08/2013 (sashak)

P:\SW users\Piezo\P21\\ file=P33-12.00.00