嘉尼企業股份有限公司 CANAL ELECTRONIC CO.,LTD.

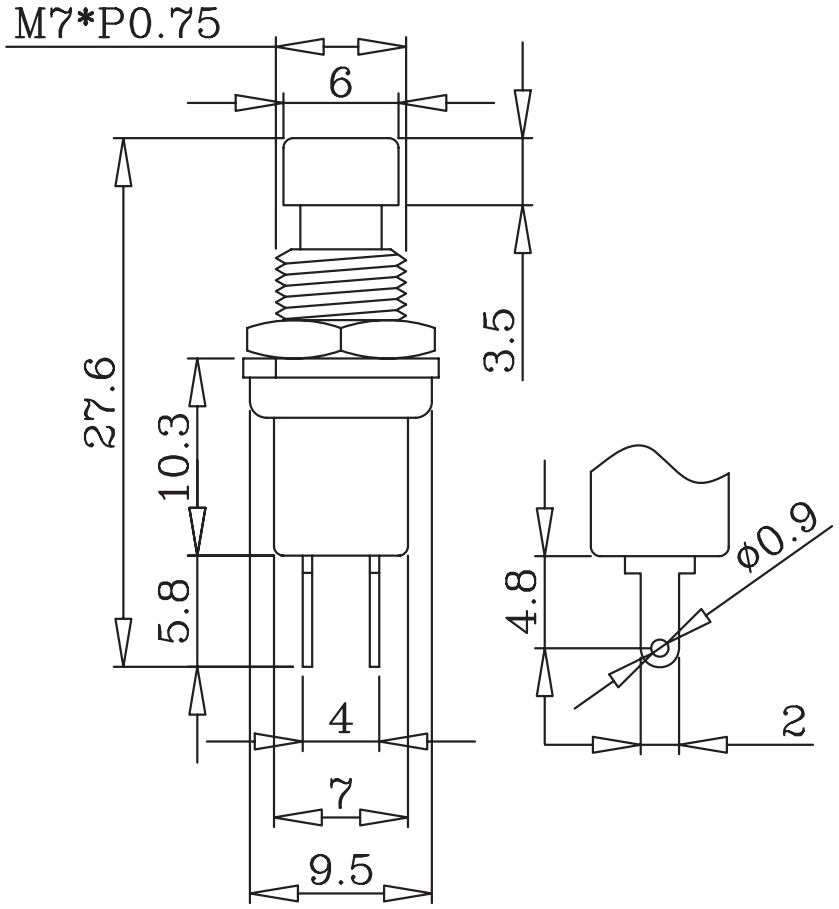

SPECIFICATIONS

1.CIRCUIT : A:(ON)−OFF B:ON−(OFF)
2.RATING : 1A 125VAC/250VAC
3.CONTACT RESISTANCE : 30mΩ Max
4.INSULATION RESISTANCE :
DC 500V 100MΩ Min
5.DIELECTRIC STRENGTH :
AC 1000V 1 MINUTE
6.ELECTRICAL LIFE : 5000 CYCLE Min
7.MECHANICAL LIFE : 10,000 CYCLE Min
8.TERMINAL MATERIAL :
COPPER,ALLOY,(SILVER OR GOLD),PLATED
9.PUSH FORCE : >0.3kg
10.BUTTON COLOR :
RED,YELLOW,ORANGE,BLACK,GREEN

NOTE: TOLERANCES UNLESS OTHERWISE SPECIFIED: $\pm \frac{.012}{0.3}$ (in/mm).

REVISION	DESCRIPION	REVISED BY	TOLEANCES .X .XX ANGLE ½°					UNIT mm	PART NAME	PS17-5 SPEC DRAWING	DWG NO
4			DRAWN BY	Alice	DESIGNED BY	Eric	SCALE				WS0451A
3											
2			CHECKED BY		APPROVED BY		DATE	2006.08.30	PART NO	IBSPS17-5AR	
1 2006.08.30	換新圖框,重新出圖	吳美玉									