嘉尼企業股份有限公司CANAL ELECTRONIC CO.,LTD.

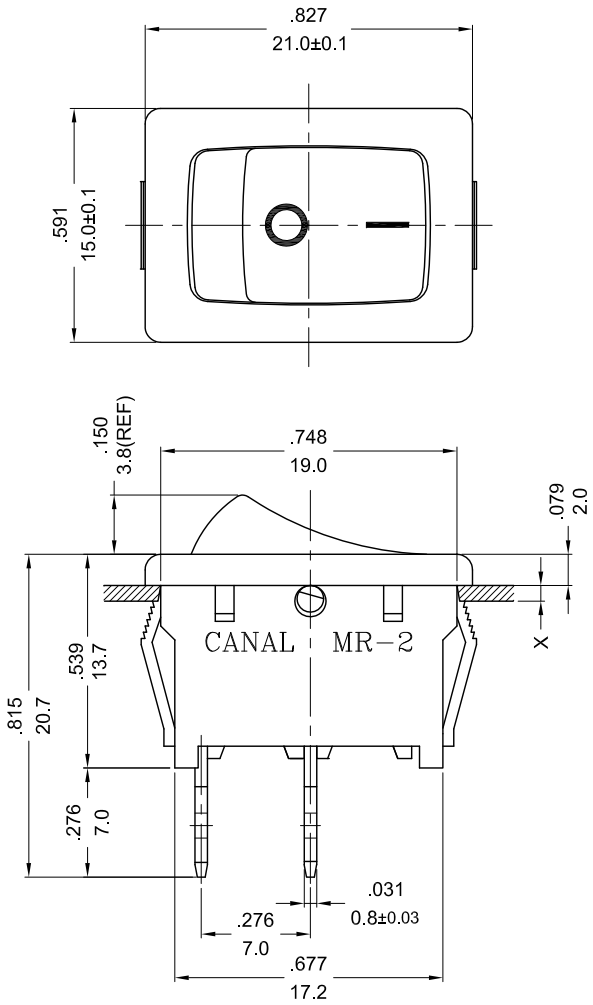

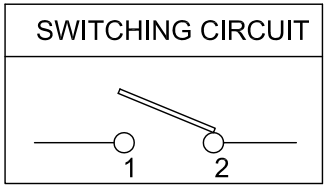

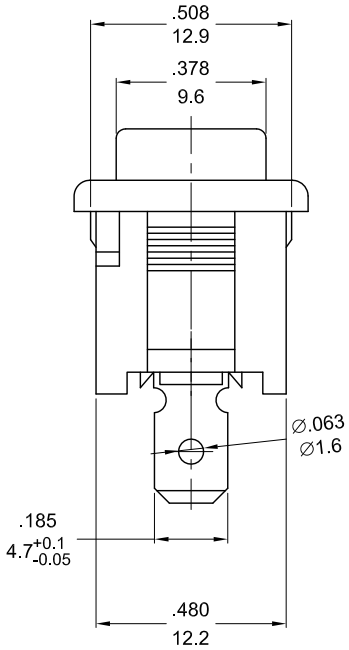

ROCKER SWITCH MODEL MR-2 SERIES

RATING:10A 125VAC, 6A 250VAC (UL/CUL)
10(4)A 250V~T125/55 (VDE/ENEC/CQC)
DIELECTRIC VOLTAGE-WITHSTAND:1,000VAC FOR 1 MINUTE
INSULATION RESISTANCE:DC 500V 100MΩ (MIN.)
CONTACT RESISTANCE:20mΩ INITIAL (MAX.)

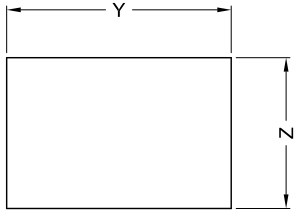

X(PANEL THICKNESS)	Y(CUTOUT DIMENSION)	Z(CUTOUT DIMENSION)
0.75~1.25mm	$19.2^{+0.1}_{-0}$ mm	$12.9^{+0.15}_{-0}$ mm
1.25~2mm	$19.4^{+0.1}_{-0}$ mm	$12.9^{+0.15}_{-0}$ mm
2~3mm	$19.8^{+0.1}_{-0}$ mm	$12.9^{+0.15}_{-0}$ mm

PANEL CUTOUT DIMENSION TABLE

NOTE:TOLERANCES UNLESS OTHERWISE SPECIFIED:±.012/0.3 (in/mm);

REVISION	DESCRIPTION	REVISED BY	TOLERANCES				ANGLE ½°	UNIT	mm	PART NAME	MR-2 SPEC DRAWING	DWG NO
4			DRAWN BY	趙俊鵬	DESIGNED BY	蔡 劍	SCALE	2/1				S3143C
3 2013.03.29	取消CSA, 重新出圖	趙俊鵬										
2 2011.05.09	整理圖面，重新出圖	杭國勤	CHECKED BY	2013.04.02 14:47:07 +08'00'	APPROVED BY	2013.04.02 14:47:16 +08'00'	DATE	2009.10.10		PART NO	MR-2-110-C5-BB-5NW	
1 2009.10.10	首次出圖	彭海華										