嘉尼企業股份有限公司CANAL ELECTRONIC CO.,LTD.

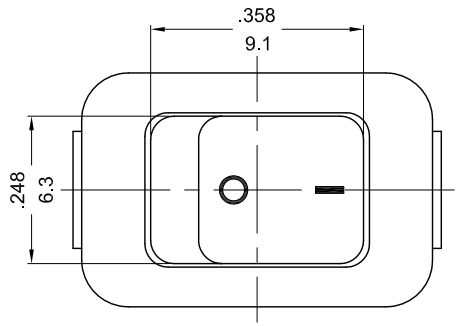

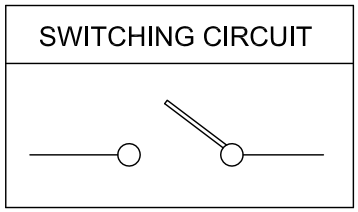

ON-OFF

ROCKER SWITCH MODEL MR-5 SERIES

RATING:3A 250VAC (UL/CUL)
6A 125VAC (UL/ CUL)
3A 250VAC~ μT100/55(VDE/ENEC/CQC)
DIELECTRIC VOLTAGE-WITHSTAND:1,000VAC FOR 1 MINUTE
INSULATION RESISTANCE:DC 500V 100MΩ (MIN.)
CONTACT RESISTANCE:20mΩ INITIAL (MAX.)

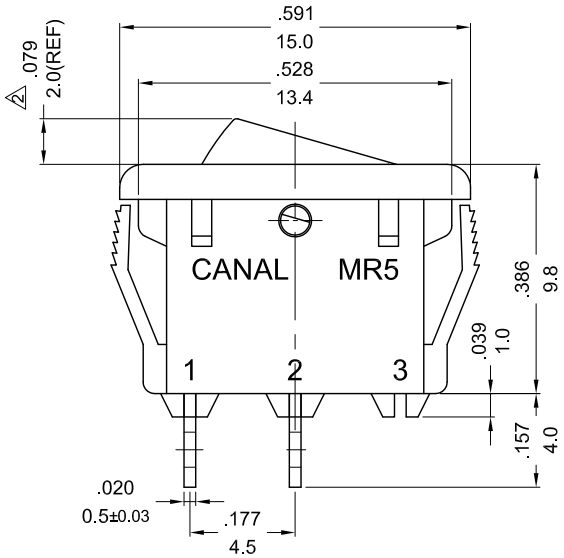

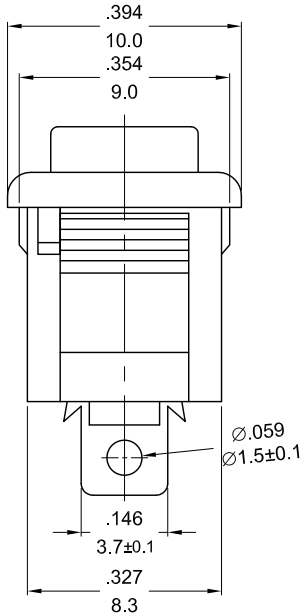

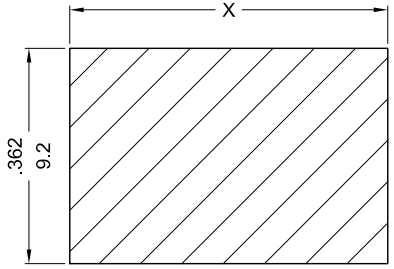

MOUNTING HOLE

	X Cutout Dimension	Panel Thickness
A	.535/13.6 $^{+0}_{-0.1}$	0.75~1.25
B	.539/13.7 $^{+0}_{-0.1}$	1.25~2.0
C	.543/13.8 $^{+0}_{-0.1}$	2.0~2.5

NOTE: TOLERANCES UNLESS OTHERWISE SPECIFIED: ± .012/0.3 (in/mm)

REVISION	DESCRIPTION	REVISED BY	TOLERANCES				ANGLE ½°	UNIT	mm	PART NAME	MR5 SPEC DRAWING	DWG NO
4			DRAWN BY	向 宏	DESIGNED BY	聶 明	SCALE	3/1				S4838B
3												
2 2014.01.02	修正尺寸，重新出圖；	劉永豐	CHECKED BY	2014.03.18 14:01:39 +08'00'	APPROVED BY	2014.03.18 14:01:48 +08'00'	DATE	2012.08.14		PART NO	MR5-110-F5-BBWC-3	
1 2012.08.14	首次出圖	向 宏										