嘉尼企業股份有限公司CANAL ELECTRONIC CO.,LTD.

ROCKER SWITCH MODEL: R SERIES

RATING:(1) 16A 125/250VAC (UL/CUL)
(2) 20A 125VAC (UL/CUL)
(3) 16(4)A 250V~T125/55 (VDE/ENEC/CQC)

DIELECTRIC WITHSTAND VOLTAGE: 1000VAC 1 MIN
INSULATION RESISTANCE:500VDC 100MΩ (MIN)
CONTACT RESISTANCE:20mΩ INITIAL(MAX.)

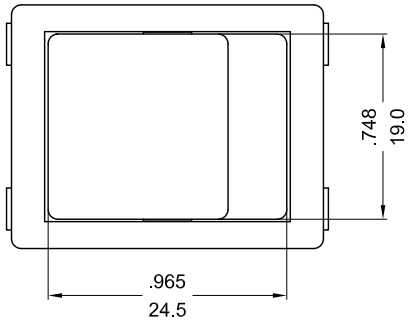

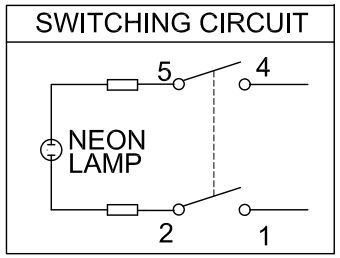

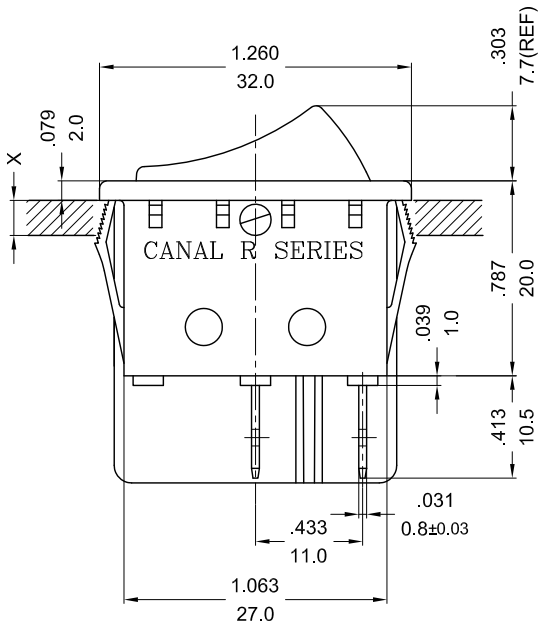

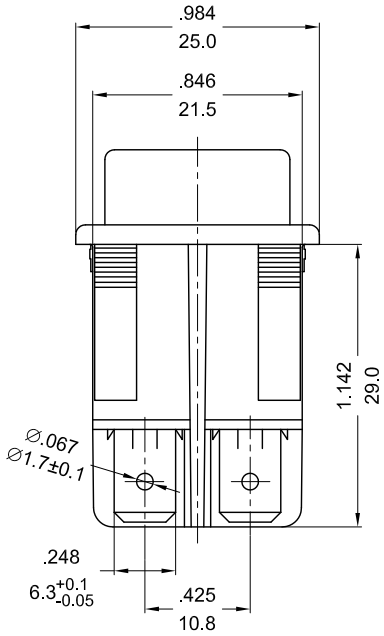

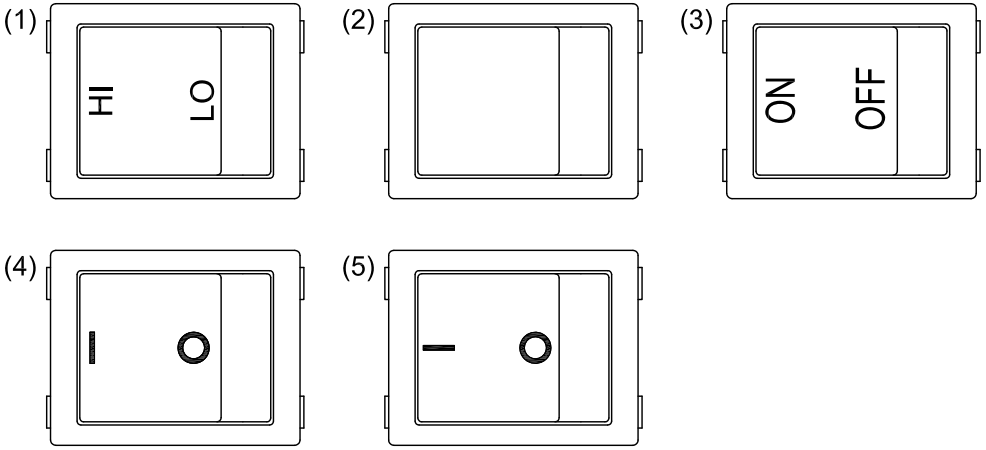

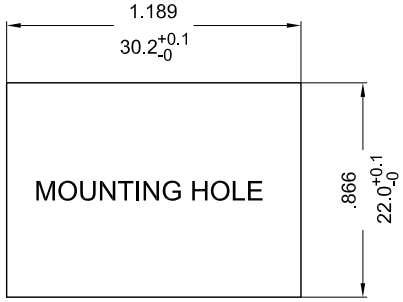

X=(0.75~2.0mm)
PANEL THICKNESS

NOTE: TOLERANCES UNLESS OTHERWISE SPECIFIED:± .012/0.3 (in/mm)

REVISION	DESCRIPTION	REVISED BY	TOLERANCES				ANGLE ½°	UNIT	mm	PART NAME	R SPEC DRAWING	DWG NO
4			DRAWN BY	謝平凡	DESIGNED BY	蔡 劍	SCALE	5/4				S4672A
3												
2			CHECKED BY	2012.03.30 17:05:49 +08'00'	APPROVED BY	2012.03.30 17:05:59 +08'00'	DATE	2012.03.27		PART NO	R210-1C*L-**1-N*C	
1 2012.03.27	首次出圖	謝平凡										