嘉尼企業股份有限公司 CANAL ELECTRONIC CO.,LTD

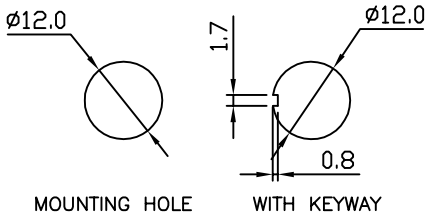

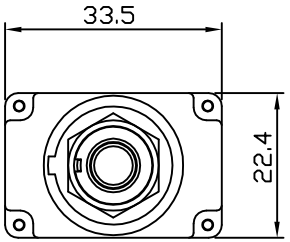

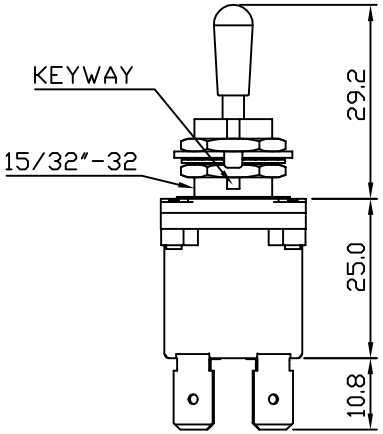

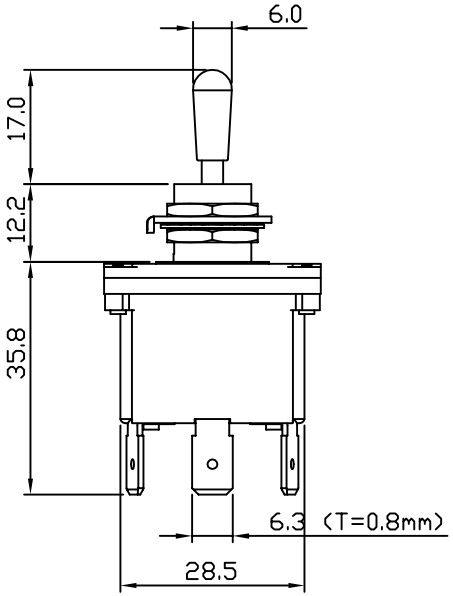

Specification :

Contact resistance: 20m ohm max. (initial)
Insulation resistance: 100M ohm min. (at 500V DC)
Dielectric strength: 1,500V AC 50/60 Hz for 1 minute
Service life: Mechanically: 100,000 operations min.
Electrically: 30,000 operations min.

Waterproof rating: IP68 level

Rating :12A 125V AC/10A 250V AC
½HP 125VAC/1HP 250VAC/5A 125VAC "L"
Circuit: (ON) - OFF - (ON)

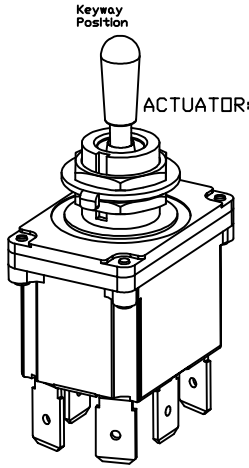

ACTUATOR: BRASS WITH DULL NICKLE PLATED

Laser Engraving Contents:
KAR-TECH
240-012-0017
12A 125V AC
10A 250V AC
1/2HP 125V AC
1HP 250V AC
5A 125V AC "L"
△2

工程部
2011.05.31
發行

REVISION	DESCRIPION	REVISED BY	TOLEANCES .X .XX ANGLE ½°				UNIT	mm	PART NAME	TB SPEC DRAWING	DWG NO
△			DRAWN BY	Jelly	DESIGNED BY	蔡劍	SCALE	2/1			WS1493A
△											
△2 2011.04.11	增加印字內容	Jelly	CHECKED BY		APPROVED BY		DATE	2011.03.24	PART NO	TB3-B17	
△1 2011.3.24	新增規格,首次出圖	Jelly									