嘉尼企業股份有限公司CANAL ELECTRONIC CO.,LTD.

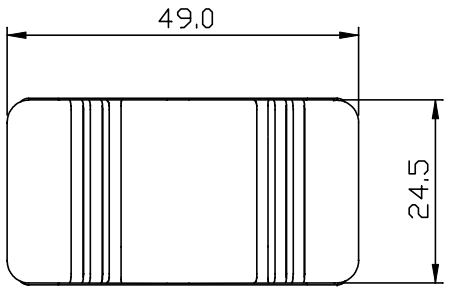

SWITCH FUCNTION		
SPST	ON-OFF	NO LAMP

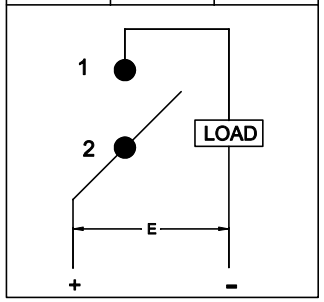

ROCKER SWITCH MODEL: X5 SERIES

RATING: 20(8)A 125/250V~ μT55 (cURus/ENEC15)
DIELECTRIC WITHSTAND VOLTAGE:1500VAC FOR 1 MINUTE
INSULATION RESISTANCE:DC 500V 100MΩ (MIN)
CONTACT RESISTANCE: 20mΩ INITIAL (MAX)

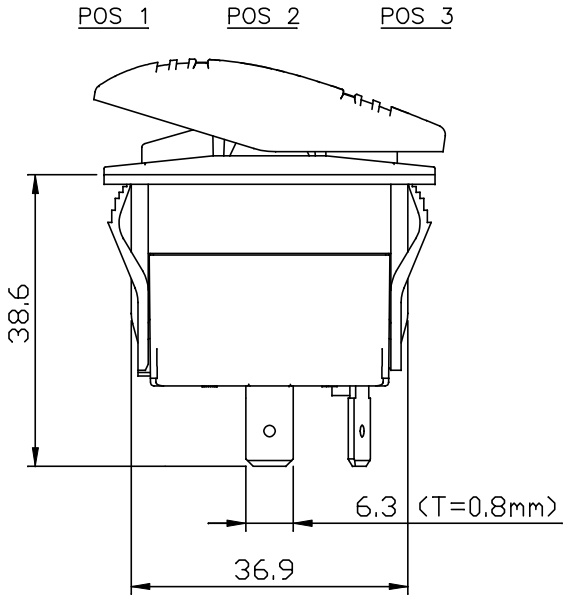

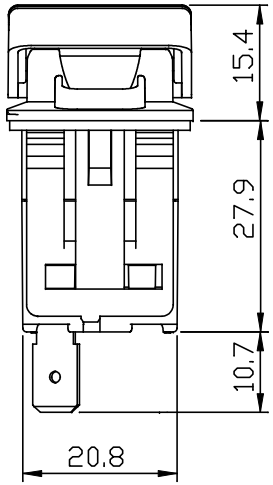

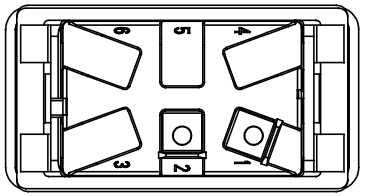

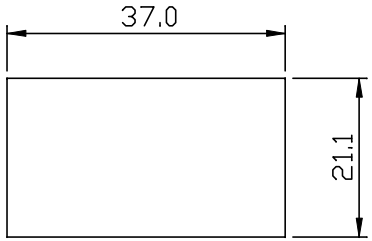

Panel Cutout

NOTE:TOLERANCES UNLESS OTHERWISE SPECIFIED: ± .012/0.3 (in/mm)

REVISION	DESCRIPTION	REVISED BY	TOLERANCES				ANGLE ½°	UNIT	mm	PART NAME	X5 SPEC DRAWING	DWG NO
4			DRAWN BY	張俊雄	DESIGNED BY	王豐文	SCALE	1/1				
3												WS2424A
2			CHECKED BY	Jimmy	APPROVED BY		DATE	201405.05		PART NO	X5-114CNN-NABB-1NN	
1 2014.05.05	首次出圖	張俊雄										