# High Voltage Ceramic Chip Capacitor - CHV Series

Cal-Chip Electronics Inc.

RoHS

## Construction and Dimensions

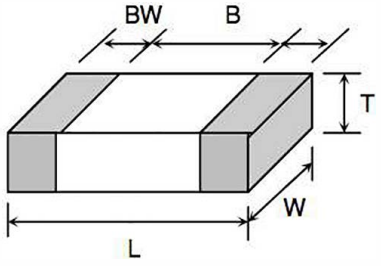


| Type (mm) | L (mm) | W (mm) | T (max) (mm) | B (min) (mm) | BW (min) (mm) |
|---|---|---|---|---|---|
| 0603 | 1.60±0.10 | 0.80±0.10 | 0.95 | 0.4 | 0.15 |
| 0805 | 2.00±0.20 | 1.25±0.20 | 1.45 | 0.7 | 0.20 |
| 1206 | 3.20±0.30 | 1.60±0.20 | 1.80 | 1.5 | 0.30 |
| 1210 | 3.20±0.30 | 2.50±0.20 | 2.60 | 1.6 | 0.30 |
| 1808 | 4.60±0.30 | 2.00±0.20 | 2.20 | 2.5 | 0.30 |
| 1812 | 4.60±0.30 | 3.20±0.30 | 3.00 | 2.5 | 0.30 |
| 1825 | 4.60±0.30 | 6.35±0.40 | 3.00 | 2.5 | 0.30 |
| 2220 | 5.70±0.40 | 5.00±0.40 | 3.00 | 3.5 | 0.30 |
| 2225 | 5.70±0.40 | 6.35±0.40 | 3.00 | 3.5 | 0.30 |

## Scope

- Cal-Chip's unique construction process ensures excellent volumetric efficiency and stability of capacitance with temperature.
- Our high voltage capacitors have extended values to those previously offered.

## Features

- Special internal electrode design offers the highest voltage rating.
- Surface mount suitable for wave and reflow soldering
- High reliability
- RoHS compliant

## Applications

- Suitable for LAN/WLAN interface
- Back-lighting inverter, DC-DC converters,
- Ballast, Modems and Power Supplies

## Electrical Specifications

| | |
|---|---|
| Operation Temperature | -55°C ~ +125°C |
| Rating Voltage | 100Vdc to 5000Vdc |
| Temperature Coefficient | NPO : ≤ ± 30ppm/°C , -55°C ~ +125°C (EIA Class I) |
| | X7R : ≤ ± 15ppm/°C , -55°C ~ +125°C (EIA Class II) |
| Dissipation Factor | NPO : Q ≤1000 , X7R : D.F.≤2.5% |
| Insulation Resistance | 10GΩ or 500/CΩ whichever is smaller |
| Aging | NPO: 0% , X7R: Typically 1.0% per decade of time |
| Dielectric Strength | 100V ≤ V < 500V : 200% Rated Voltage |
| | 500V ≤ V < 1000V : 150% Rated Voltage |
| | 1000V ≤ V : 120% Rated Voltage |

| CHV | 0805 | N | 250 | 103 | K | X | T | D |
|---|---|---|---|---|---|---|---|---|
| Product Type | Size | Termination Options | Rated Voltage | Capacitance | Tolerance | Dielectric | Packaging | Packaging |
| | 0603: 0603<br>0805: 0805<br>1206: 1206<br>1210: 1210<br>1808: 1808<br>1812: 1812<br>1825: 1825<br>2220: 2220<br>2225: 2225 | N: Nickel Barrier<br>X: Nickel Barrier/ Flex Term.<br>A: Nickel Barrier/ Arc Protection | 250: 250VDC<br>450: 450<br>500: 500<br>630: 630<br>1K0: 1KV<br>1K5: 1.5KV<br>2K0: 2KV<br>2K5: 2.5KV<br>3K0: 3KV<br>4K0: 4KV<br>5K0: 5KV | Two significant digits followed by no. of zeros. And R in place of decimal point. | B: ±.1pF<br>C: ±0.25pF<br>D: ±0.50pF<br>F: ±1%<br>G: ±2%<br>J: ±5%<br>K: ±10%<br>M: ±20% | C: COG<br>X: X7R | T: 7" Reel | D: Optional 10K reel (from 0603 - 1210 size) |


Calchip Electronics, INC.
Phone: (215) 942-8900

www.calchipelectronics.com
Fax : (215) 942-6400

Cal-Chip Electronics Inc.

## ■ Capacitance Range

| DIMENSION (MM) | | CHV0603 | | | CHV0805 | | | | |
|---|---|---|---|---|---|---|---|---|---|
| **L(L1)** | | 1.6±0.1 | | | 2.00 ± 0.2 | | | | |
| **W** | | 0.8±0.1 | | | 1.25 ± 0.2 | | | | |
| **BW(L2/L3)** | | 0.40 ± 0.05 | | | 0.7 ± 0.2 | | | | |
| Dielectric | | COG | X7R | | COG | | X7R | | |
| **H** (max) | | 0.95 | 0.95 | 0.95 | 1.45 | 1.1 | 1.1 | 1.1 | 1.1 |
| Rated Voltage | | 250 | 250 | 500 | 250 | 500 | 250 | 500 | 1KV |
| Cap. Range | | | | | | | | | |
| 1.0pF | 1R0 | | | | | | | | |
| 1.3 | 1R3 | | | | | | | | |
| 1.5 | 1R5 | | | | | | | | |
| 1.8 | 1R8 | | | | | | | | |
| 2.0 | 2R0 | | | | | | | | |
| 2.2 | 2R2 | | | | | | | | |
| 2.4 | 2R4 | | | | | | | | |
| 2.5 | 2R5 | | | | | | | | |
| 2.7 | 2R7 | | | | | | | | |
| 3.0 | 3R0 | | | | | | | | |
| 3.3 | 3R3 | | | | | | | | |
| 3.6 | 3R6 | | | | | | | | |
| 3.9 | 3R9 | | | | | | | | |
| 4.0 | 4R0 | | | | | | | | |
| 4.3 | 4R3 | | | | | | | | |
| 4.7 | 4R7 | | | | | | | | |
| 5.0 | 5R0 | | | | | | | | |
| 5.1 | 5R1 | | | | | | | | |
| 5.6 | 5R6 | | | | | | | | |
| 6.0 | 6R0 | | | | | | | | |
| 6.8 | 6R8 | | | | | | | | |
| 7.0 | 7R0 | | | | | | | | |
| 7.5 | 7R5 | | | | | | | | |
| 8.0 | 8R0 | | | | | | | | |
| 8.2 | 8R2 | | | | | | | | |
| 9 | 9R0 | | | | | | | | |
| 9.1 | 9R1 | | | | | | | | |
| 10 | 100 | | | | | | | | |
| 11 | 110 | | | | | | | | |
| 12 | 120 | | | | | | | | |
| 13 | 130 | | | | | | | | |
| 15 | 150 | | | | | | | | |
| 16 | 160 | | | | | | | | |
| 18 | 180 | | | | | | | | |
| 20 | 200 | | | | | | | | |
| 22 | 220 | | | | | | | | |
| 24 | 240 | | | | | | | | |
| 27 | 270 | | | | | | | | |
| 30 | 300 | | | | | | | | |
| 33 | 330 | | | | | | | | |
| 36 | 360 | | | | | | | | |
| 39 | 390 | | | | | | | | |
| 43 | 430 | | | | | | | | |

## ■ Capacitance Range

| DIMENSION (MM) | | CHV0603 | | | CHV0805 | | | | |
|---|---|---|---|---|---|---|---|---|---|
| **L(L1)** | | 1.6±0.1 | | | 2.00 ± 0.2 | | | | |
| **W** | | 0.8±0.1 | | | 1.25 ± 0.2 | | | | |
| **BW(L2/L3)** | | 0.40 ± 0.05 | | | 0.7 ± 0.2 | | | | |
| Dielectric | | COG | X7R | | COG | | X7R | | |
| **H** (max) | | 0.95 | 0.95 | 0.95 | 1.45 | 1.1 | 1.1 | 1.1 | 1.1 |
| Rated Voltage | | 250 | 250 | 500 | 250 | 500 | 250 | 500 | 1KV |
| Cap. Range | | | | | | | | | |
| 47 | 470 | | | | | | | | |
| 51 | 510 | | | | | | | | |
| 56 | 560 | | | | | | | | |
| 62 | 620 | | | | | | | | |
| 68 | 680 | | | | | | | | |
| 75 | 750 | | | | | | | | |
| 82 | 820 | | | | | | | | |
| 91 | 910 | | | | | | | | |
| 100 | 101 | | | | | | | | |
| 120 | 121 | | | | | | | | |
| 130 | 131 | | | | | | | | |
| 150 | 151 | | | | | | | | |
| 160 | 161 | | | | | | | | |
| 180 | 181 | | | | | | | | |
| 200 | 201 | | | | | | | | |
| 220 | 221 | | | | | | | | |
| 240 | 241 | | | | | | | | |
| 270 | 271 | | | | | | | | |
| 300 | 301 | | | | | | | | |
| 330 | 331 | | | | | | | | |
| 360 | 361 | | | | | | | | |
| 390 | 391 | | | | | | | | |
| 430 | 431 | | | | | | | | |
| 470 | 471 | | | | | | | | |
| 510 | 511 | | | | | | | | |
| 560 | 561 | | | | | | | | |
| 620 | 621 | | | | | | | | |
| 680 | 681 | | | | | | | | |
| 750 | 751 | | | | | | | | |
| 820 | 821 | | | | | | | | |
| 910 | 911 | | | | | | | | |
| 1.0nF | 102 | | | | | | | | |
| 1.2 | 122 | | | | | | | | |
| 1.3 | 132 | | | | | | | | |
| 1.5 | 152 | | | | | | | | |
| 1.6 | 162 | | | | | | | | |
| 1.8 | 182 | | | | | | | | |
| 1.9 | 192 | | | | | | | | |
| 2.2 | 222 | | | | | | | | |
| 2.7 | 272 | | | | | | | | |
| 3.3 | 332 | | | | | | | | |
| 3.9 | 392 | | | | | | | | |
| 4.7 | 472 | | | | | | | | |
| 5.6 | 562 | | | | | | | | |
| 6.8 | 682 | | | | | | | | |
| 8.2 | 822 | | | | | | | | |
| 10 | 103 | | | | | | | | |
| 12 | 123 | | | | | | | | |
| 15 | 153 | | | | | | | | |
| 18 | 183 | | | | | | | | |
| 22 | 223 | | | | | | | | |
| 27 | 273 | | | | | | | | |
| 33 | 333 | | | | | | | | |
| 39 | 393 | | | | | | | | |
| 47 | 473 | | | | | | | | |
| 56 | 563 | | | | | | | | |
| 68 | 683 | | | | | | | | |
| 82 | 823 | | | | | | | | |

Cal-Chip Electronics Inc.

| DIMENSION (MM) | | CHV1206 | | | | | | | | | | | | | | |
|---|---|---|---|---|---|---|---|---|---|---|---|---|---|---|---|---|
| **L(L1)** | | 3.2±0.30 | | | | | | | | | | | | | | |
| **W** | | 1.6±0.2 | | | | | | | | | | | | | | |
| **BW(L2/L3)** | | 1.50±0.3 | | | | | | | | | | | | | | |
| Dielectric | | COG | | | | | | X7R | | | | | | | | |
| **H** (max) | | 1.8 | | | | | | 1.8 | | | | | | | | |
| Rated Voltage | | 250 | 500 | 630 | 1KV | 2KV | 3KV | 250 | 450 | 500 | 630 | 1KV | 1.5KV | 2KV | 2.5KV | 3KV |
| Cap. Range | | | | | | | | | | | | | | | | |
| 1.0pF | 1R0 | | | | | | | | | | | | | | | |
| 2.0 | 2R0 | | | | | | | | | | | | | | | |
| 3.3 | 3R3 | | | | | | | | | | | | | | | |
| 3.9 | 3R9 | | | | | | | | | | | | | | | |
| 5.0 | 5R0 | | | | | | | | | | | | | | | |
| 8.2 | 8R2 | | | | | | | | | | | | | | | |
| 10 | 100 | | | | | | | | | | | | | | | |
| 12 | 120 | | | | | | | | | | | | | | | |
| 15 | 150 | | | | | | | | | | | | | | | |
| 18 | 180 | | | | | | | | | | | | | | | |
| 22 | 220 | | | | | | | | | | | | | | | |
| 27 | 270 | | | | | | | | | | | | | | | |
| 33 | 330 | | | | | | | | | | | | | | | |
| 39 | 390 | | | | | | | | | | | | | | | |
| 47 | 470 | | | | | | | | | | | | | | | |
| 56 | 560 | | | | | | | | | | | | | | | |
| 68 | 680 | | | | | | | | | | | | | | | |
| 82 | 820 | | | | | | | | | | | | | | | |
| 100 | 101 | | | | | | | | | | | | | | | |
| 120 | 121 | | | | | | | | | | | | | | | |
| 150 | 151 | | | | | | | | | | | | | | | |
| 180 | 181 | | | | | | | | | | | | | | | |
| 220 | 221 | | | | | | | | | | | | | | | |
| 270 | 271 | | | | | | | | | | | | | | | |
| 330 | 331 | | | | | | | | | | | | | | | |
| 390 | 391 | | | | | | | | | | | | | | | |
| 470 | 471 | | | | | | | | | | | | | | | |
| 560 | 561 | | | | | | | | | | | | | | | |
| 680 | 681 | | | | | | | | | | | | | | | |
| 820 | 821 | | | | | | | | | | | | | | | |
| 1.0nF | 102 | | | | | | | | | | | | | | | |
| 1.2 | 122 | | | | | | | | | | | | | | | |
| 1.5 | 152 | | | | | | | | | | | | | | | |
| 1.8 | 182 | | | | | | | | | | | | | | | |
| 2.2 | 222 | | | | | | | | | | | | | | | |
| 2.7 | 272 | | | | | | | | | | | | | | | |
| 3.3 | 332 | | | | | | | | | | | | | | | |
| 3.9 | 392 | | | | | | | | | | | | | | | |
| 4.7 | 472 | | | | | | | | | | | | | | | |
| 5.6 | 562 | | | | | | | | | | | | | | | |
| 6.8 | 682 | | | | | | | | | | | | | | | |
| 8.2 | 822 | | | | | | | | | | | | | | | |
| 10 | 103 | | | | | | | | | | | | | | | |
| 12 | 123 | | | | | | | | | | | | | | | |
| 15 | 153 | | | | | | | | | | | | | | | |
| 18 | 183 | | | | | | | | | | | | | | | |
| 22 | 223 | | | | | | | | | | | | | | | |
| 27 | 273 | | | | | | | | | | | | | | | |
| 33 | 333 | | | | | | | | | | | | | | | |
| 39 | 393 | | | | | | | | | | | | | | | |
| 47 | 473 | | | | | | | | | | | | | | | |
| 56 | 563 | | | | | | | | | | | | | | | |
| 68 | 683 | | | | | | | | | | | | | | | |
| 82 | 823 | | | | | | | | | | | | | | | |
| 100 | 104 | | | | | | | | | | | | | | | |
| 124 | 124 | | | | | | | | | | | | | | | |
| 154 | 154 | | | | | | | | | | | | | | | |
| 184 | 184 | | | | | | | | | | | | | | | |
| 224 | 224 | | | | | | | | | | | | | | | |
| 274 | 274 | | | | | | | | | | | | | | | |
| 334 | 334 | | | | | | | | | | | | | | | |
| 393 | 394 | | | | | | | | | | | | | | | |
| 564 | 564 | | | | | | | | | | | | | | | |
| 684 | 684 | | | | | | | | | | | | | | | |
| 824 | 824 | | | | | | | | | | | | | | | |

Cal-Chip Electronics Inc.

| DIMENSION (MM) | | CHV1210 | | | | | | | |
|---|---|---|---|---|---|---|---|---|---|
| L(L1) | | 3.20±0.30 | | | | | | | |
| W | | 2.50±0.20 | | | | | | | |
| BW(L2/L3) | | 1.60±0.30 | | | | | | | |
| Dielectric | | COG | | | | X7R | | | |
| H (max) | | 2.2 | | | | 2.6 | 2.2 | 2.6 | |
| Rated Voltage | | 250 | 500 | 630 | 1KV | 250 | 500 | 1KV | 2KV |
| Cap. Range | | | | | | | | | |
| 2.0pF | 2R0 | | | | | | | | |
| 3.3 | 3R3 | | | | | | | | |
| 3.9 | 3R9 | | | | | | | | |
| 5.0 | 5R0 | | | | | | | | |
| 8.2 | 8R2 | | | | | | | | |
| 10 | 100 | ■ | ■ | ■ | ■ | | | | |
| 12 | 120 | ■ | ■ | ■ | ■ | | | | |
| 15 | 150 | ■ | ■ | ■ | ■ | | | | |
| 18 | 180 | ■ | ■ | ■ | ■ | | | | |
| 22 | 220 | ■ | ■ | ■ | ■ | | | | |
| 27 | 270 | ■ | ■ | ■ | ■ | | | | |
| 33 | 330 | ■ | ■ | ■ | ■ | | | | |
| 39 | 390 | ■ | ■ | ■ | ■ | | | | |
| 47 | 470 | ■ | ■ | ■ | ■ | | | | |
| 56 | 560 | ■ | ■ | ■ | ■ | | | | |
| 68 | 680 | ■ | ■ | ■ | ■ | | | | |
| 82 | 820 | ■ | ■ | ■ | ■ | | | | |
| 100 | 101 | ■ | ■ | ■ | ■ | | | | |
| 120 | 121 | ■ | ■ | ■ | ■ | | | | |
| 150 | 151 | ■ | ■ | ■ | ■ | | | | ■ |
| 180 | 181 | ■ | ■ | ■ | ■ | | | | ■ |
| 220 | 221 | ■ | ■ | ■ | ■ | ■ | ■ | ■ | ■ |
| 270 | 271 | ■ | ■ | ■ | ■ | ■ | ■ | ■ | ■ |
| 330 | 331 | ■ | ■ | ■ | ■ | ■ | ■ | ■ | ■ |
| 390 | 391 | ■ | ■ | ■ | ■ | ■ | ■ | ■ | ■ |
| 470 | 471 | ■ | ■ | ■ | ■ | ■ | ■ | ■ | ■ |
| 560 | 561 | ■ | ■ | ■ | ■ | ■ | ■ | ■ | ■ |
| 680 | 681 | ■ | ■ | ■ | ■ | ■ | ■ | ■ | ■ |
| 820 | 821 | ■ | ■ | ■ | ■ | ■ | ■ | ■ | ■ |
| 1.0nF | 102 | ■ | ■ | ■ | ■ | ■ | ■ | ■ | ■ |
| 1.2 | 122 | ■ | ■ | ■ | ■ | ■ | ■ | ■ | ■ |
| 1.5 | 152 | ■ | ■ | ■ | ■ | ■ | ■ | ■ | ■ |
| 1.8 | 182 | ■ | ■ | ■ | ■ | ■ | ■ | ■ | ■ |
| 2.2 | 222 | ■ | ■ | ■ | ■ | ■ | ■ | ■ | ■ |
| 2.7 | 272 | ■ | ■ | ■ | | ■ | ■ | ■ | ■ |
| 3.3 | 332 | ■ | ■ | ■ | | ■ | ■ | ■ | ■ |
| 3.9 | 392 | ■ | ■ | ■ | | ■ | ■ | ■ | ■ |
| 4.7 | 472 | ■ | ■ | ■ | | ■ | ■ | ■ | ■ |
| 5.6 | 562 | ■ | ■ | ■ | | ■ | ■ | ■ | ■ |
| 6.8 | 682 | ■ | ■ | ■ | | ■ | ■ | ■ | ■ |
| 8.2 | 822 | ■ | | | | ■ | ■ | ■ | |
| 10 | 103 | ■ | | | | ■ | ■ | ■ | |
| 12 | 123 | | | | | ■ | ■ | ■ | |
| 15 | 153 | | | | | ■ | ■ | ■ | |
| 18 | 183 | | | | | ■ | ■ | ■ | |
| 22 | 223 | | | | | ■ | ■ | ■ | |
| 27 | 273 | | | | | ■ | ■ | ■ | |
| 33 | 333 | | | | | ■ | ■ | ■ | |
| 39 | 393 | | | | | ■ | ■ | ■ | |
| 47 | 473 | | | | | ■ | ■ | ■ | |
| 56 | 563 | | | | | ■ | ■ | | |
| 68 | 683 | | | | | ■ | ■ | | |
| 82 | 823 | | | | | ■ | ■ | | |
| 100 | 104 | | | | | ■ | ■ | | |
| 124 | 124 | | | | | ■ | ■ | | |
| 154 | 154 | | | | | ■ | | | |
| 184 | 184 | | | | | ■ | | | |
| 224 | 224 | | | | | ■ | | | |
| 274 | 274 | | | | | ■ | | | |
| 334 | 334 | | | | | ■ | | | |
| 393 | 394 | | | | | ■ | | | |
| 474 | 474 | | | | | ■ | | | |
| 564 | 564 | | | | | ■ | | | |
| 684 | 684 | | | | | ■ | | | |
| 824 | 824 | | | | | | | | |
| 1.0uF | 105 | | | | | | | | |
| 2.2 | 225 | | | | | | | | |
| 3.3 | 335 | | | | | | | | |
| 6.8 | 685 | | | | | | | | |

Cal-Chip Electronics Inc.

| DIMENSION (MM) | | CHV1808 | | | | | | | | | | | | | |
|---|---|---|---|---|---|---|---|---|---|---|---|---|---|---|---|
| **L(L1)** | | 4.60±0.30 | | | | | | | | | | | | | |
| **W** | | 2.00±0.20 | | | | | | | | | | | | | |
| **BW(L2/L3)** | | 2.50±0.30 | | | | | | | | | | | | | |
| Dielectric | | COG | | | | | | | | X7R | | | | | |
| **H** (max) | | 1.8 | | | 2.2 | | | | | 2.2 | | | 2.2 | 2.2 | 2.2 |
| Rated Voltage | | 250 | 500 | 630 | 1KV | 2KV | 3KV | 4KV | 5KV | 250 | 500 | 1KV | 2KV | 3KV | 4KV |
| Cap. Range | | | | | | | | | | | | | | | |
| 2.0pF | 2R0 | | | | | | | | | | | | | | |
| 3.3 | 3R3 | | | | | | | | | | | | | | |
| 3.9 | 3R9 | | | | | | | | | | | | | | |
| 5.0 | 5R0 | | | | | | | | | | | | | | |
| 8.2 | 8R2 | | | | | | | | | | | | | | |
| 10 | 100 | | | | | | | | | | | | | | |
| 12 | 120 | | | | | | | | | | | | | | |
| 15 | 150 | | | | | | | | | | | | | | |
| 18 | 180 | | | | | | | | | | | | | | |
| 22 | 220 | | | | | | | | | | | | | | |
| 27 | 270 | | | | | | | | | | | | | | |
| 33 | 330 | | | | | | | | | | | | | | |
| 39 | 390 | | | | | | | | | | | | | | |
| 47 | 470 | | | | | | | | | | | | | | |
| 56 | 560 | | | | | | | | | | | | | | |
| 68 | 680 | | | | | | | | | | | | | | |
| 82 | 820 | | | | | | | | | | | | | | |
| 100 | 101 | | | | | | | | | | | | | | |
| 120 | 121 | | | | | | | | | | | | | | |
| 150 | 151 | | | | | | | | | | | | | | |
| 180 | 181 | | | | | | | | | | | | | | |
| 220 | 221 | | | | | | | | | | | | | | |
| 270 | 271 | | | | | | | | | | | | | | |
| 330 | 331 | | | | | | | | | | | | | | |
| 390 | 391 | | | | | | | | | | | | | | |
| 470 | 471 | | | | | | | | | | | | | | |
| 560 | 561 | | | | | | | | | | | | | | |
| 680 | 681 | | | | | | | | | | | | | | |
| 820 | 821 | | | | | | | | | | | | | | |
| 1.0nF | 102 | | | | | | | | | | | | | | |
| 1.2 | 122 | | | | | | | | | | | | | | |
| 1.5 | 152 | | | | | | | | | | | | | | |
| 1.8 | 182 | | | | | | | | | | | | | | |
| 2.2 | 222 | | | | | | | | | | | | | | |
| 2.7 | 272 | | | | | | | | | | | | | | |
| 3.3 | 332 | | | | | | | | | | | | | | |
| 3.9 | 392 | | | | | | | | | | | | | | |
| 4.7 | 472 | | | | | | | | | | | | | | |
| 5.6 | 562 | | | | | | | | | | | | | | |
| 6.8 | 682 | | | | | | | | | | | | | | |
| 8.2 | 822 | | | | | | | | | | | | | | |
| 10 | 103 | | | | | | | | | | | | | | |
| 12 | 123 | | | | | | | | | | | | | | |
| 15 | 153 | | | | | | | | | | | | | | |
| 18 | 183 | | | | | | | | | | | | | | |
| 22 | 223 | | | | | | | | | | | | | | |
| 27 | 273 | | | | | | | | | | | | | | |
| 33 | 333 | | | | | | | | | | | | | | |
| 39 | 393 | | | | | | | | | | | | | | |
| 47 | 473 | | | | | | | | | | | | | | |
| 56 | 563 | | | | | | | | | | | | | | |
| 68 | 683 | | | | | | | | | | | | | | |
| 82 | 823 | | | | | | | | | | | | | | |
| 100nF | 104 | | | | | | | | | | | | | | |

Cal-Chip Electronics Inc.

| DIMENSION (MM) | | CHV1812 | | | | | | | | | | |
|---|---|---|---|---|---|---|---|---|---|---|---|---|
| **L(L1)** | | 4.60±0.30 | | | | | | | | | | |
| **W** | | 3.20±0.30 | | | | | | | | | | |
| **BW(L2/L3)** | | 2.50±0.30 | | | | | | | | | | |
| Dielectric | | COG | | | | | | X7R | | | | |
| **H** (max) | | 1.8 | 1.8 | | 2.6 | 2.2 | 2.6 | 2.6 | 3 | | 1.8 | 2.2 |
| Rated Voltage | | 250 | 500 | 630 | 1KV | 2KV | 3KV | 250 | 500 | 1KV | 2KV | 3KV |
| Cap. Range | | | | | | | | | | | | |
| 2.0pF | 2R0 | | | | | | | | | | | |
| 3.3 | 3R3 | | | | | | | | | | | |
| 3.9 | 3R9 | | | | | | | | | | | |
| 5.0 | 5R0 | | | | | | | | | | | |
| 8.2 | 8R2 | | | | | | | | | | | |
| 10 | 100 | | | | | | | | | | | |
| 12 | 120 | | | | | | | | | | | |
| 15 | 150 | | | | | | | | | | | |
| 18 | 180 | | | | | | | | | | | |
| 22 | 220 | | | | | | | | | | | |
| 27 | 270 | | | | | | | | | | | |
| 33 | 330 | | | | | | | | | | | |
| 39 | 390 | | | | | | | | | | | |
| 47 | 470 | | | | | | | | | | | |
| 56 | 560 | | | | | | | | | | | |
| 68 | 680 | | | | | | | | | | | |
| 82 | 820 | | | | | | | | | | | |
| 100 | 101 | | | | | | | | | | | |
| 120 | 121 | | | | | | | | | | | |
| 150 | 151 | | | | | | | | | | | |
| 180 | 181 | | | | | | | | | | | |
| 220 | 221 | | | | | | | | | | | |
| 270 | 271 | | | | | | | | | | | |
| 330 | 331 | | | | | | | | | | | |
| 390 | 391 | | | | | | | | | | | |
| 470 | 471 | | | | | | | | | | | |
| 560 | 561 | | | | | | | | | | | |
| 680 | 681 | | | | | | | | | | | |
| 820 | 821 | | | | | | | | | | | |
| 1.0nF | 102 | | | | | | | | | | | |
| 1.2 | 122 | | | | | | | | | | | |
| 1.5 | 152 | | | | | | | | | | | |
| 1.8 | 182 | | | | | | | | | | | |
| 2.2 | 222 | | | | | | | | | | | |
| 2.7 | 272 | | | | | | | | | | | |
| 3.3 | 332 | | | | | | | | | | | |
| 3.9 | 392 | | | | | | | | | | | |
| 4.7 | 472 | | | | | | | | | | | |
| 5.6 | 562 | | | | | | | | | | | |
| 6.8 | 682 | | | | | | | | | | | |
| 8.2 | 822 | | | | | | | | | | | |
| 10 | 103 | | | | | | | | | | | |
| 12 | 123 | | | | | | | | | | | |
| 15 | 153 | | | | | | | | | | | |
| 18 | 183 | | | | | | | | | | | |
| 22 | 223 | | | | | | | | | | | |
| 27 | 273 | | | | | | | | | | | |
| 33 | 333 | | | | | | | | | | | |
| 39 | 393 | | | | | | | | | | | |
| 47 | 473 | | | | | | | | | | | |
| 56 | 563 | | | | | | | | | | | |
| 68 | 683 | | | | | | | | | | | |
| 82 | 823 | | | | | | | | | | | |
| 100 | 104 | | | | | | | | | | | |
| 124 | 124 | | | | | | | | | | | |
| 154 | 154 | | | | | | | | | | | |
| 184 | 184 | | | | | | | | | | | |
| 224 | 224 | | | | | | | | | | | |
| 274 | 274 | | | | | | | | | | | |
| 334 | 334 | | | | | | | | | | | |
| 393 | 394 | | | | | | | | | | | |
| 474 | 474 | | | | | | | | | | | |
| 564 | 564 | | | | | | | | | | | |
| 684 | 684 | | | | | | | | | | | |
| 824 | 824 | | | | | | | | | | | |
| 1.0uF | 105 | | | | | | | | | | | |
| 2.2 | 225 | | | | | | | | | | | |
| 3.3 | 335 | | | | | | | | | | | |
| 4.7 | 475 | | | | | | | | | | | |
| 6.8 | 685 | | | | | | | | | | | |

Cal-Chip Electronics Inc.

| DIMENSION (MM) | | CHV1825 | | | | | | | | | |
|---|---|---|---|---|---|---|---|---|---|---|---|
| L(L1) | | 4.60±0.30 | | | | | | | | | |
| W | | 6.35±0.40 | | | | | | | | | |
| BW(L2/L3) | | 2.50±0.30 | | | | | | | | | |
| Dielectric | | COG | | | | X7R | | | | | |
| H (max) | | 1.8 | 2.6 | 2.6 | 2.6 | 3.0 | 1.8 | 2.2 | | 2.6 | 2.6 |
| Rated Voltage | | 250 | 500 | 630 | 1KV | 250 | 500 | 1KV | 2KV | 3KV | 4KV |
| Cap. Range | | | | | | | | | | | |
| 2.0pF | 2R0 | | | | | | | | | | |
| 3.3 | 3R3 | | | | | | | | | | |
| 3.9 | 3R9 | | | | | | | | | | |
| 5.0 | 5R0 | | | | | | | | | | |
| 8.2 | 8R2 | | | | | | | | | | |
| 10 | 100 | | | | | | | | | | |
| 12 | 120 | | | | | | | | | | |
| 15 | 150 | | | | | | | | | | |
| 18 | 180 | | | | | | | | | | |
| 22 | 220 | | | | | | | | | | |
| 27 | 270 | | | | | | | | | | |
| 33 | 330 | | | | | | | | | | |
| 39 | 390 | | | | | | | | | | |
| 47 | 470 | | | | | | | | | | |
| 56 | 560 | | | | | | | | | | |
| 68 | 680 | | | | | | | | | | |
| 82 | 820 | | | | | | | | | | |
| 100 | 101 | | | | | | | | | | |
| 120 | 121 | | | | | | | | | | |
| 150 | 151 | | | | | | | | | | |
| 180 | 181 | | | | | | | | | | |
| 220 | 221 | | | | | | | | | | |
| 270 | 271 | | | | | | | | | | |
| 330 | 331 | | | | | | | | | | |
| 390 | 391 | | | | | | | | | | |
| 470 | 471 | | | | | | | | | | |
| 560 | 561 | | | | | | | | | | |
| 680 | 681 | | | | | | | | | | |
| 820 | 821 | | | | | | | | | | |
| 1.0nF | 102 | | | | | | | | | | |
| 1.2 | 122 | | | | | | | | | | |
| 1.5 | 152 | | | | | | | | | | |
| 1.8 | 182 | | | | | | | | | | |
| 2.2 | 222 | | | | | | | | | | |
| 2.7 | 272 | | | | | | | | | | |
| 3.3 | 332 | | | | | | | | | | |
| 3.9 | 392 | | | | | | | | | | |
| 4.7 | 472 | | | | | | | | | | |
| 5.6 | 562 | | | | | | | | | | |
| 6.8 | 682 | | | | | | | | | | |
| 8.2 | 822 | | | | | | | | | | |
| 10 | 103 | | | | | | | | | | |
| 12 | 123 | | | | | | | | | | |
| 15 | 153 | | | | | | | | | | |
| 18 | 183 | | | | | | | | | | |
| 22 | 223 | | | | | | | | | | |
| 27 | 273 | | | | | | | | | | |
| 33 | 333 | | | | | | | | | | |
| 39 | 393 | | | | | | | | | | |
| 47 | 473 | | | | | | | | | | |
| 56 | 563 | | | | | | | | | | |
| 68 | 683 | | | | | | | | | | |
| 82 | 823 | | | | | | | | | | |
| 100 | 104 | | | | | | | | | | |
| 124 | 124 | | | | | | | | | | |
| 154 | 154 | | | | | | | | | | |
| 184 | 184 | | | | | | | | | | |
| 224 | 224 | | | | | | | | | | |
| 274 | 274 | | | | | | | | | | |
| 334 | 334 | | | | | | | | | | |
| 393 | 394 | | | | | | | | | | |
| 474 | 474 | | | | | | | | | | |
| 564 | 564 | | | | | | | | | | |
| 684 | 684 | | | | | | | | | | |
| 824 | 824 | | | | | | | | | | |
| 1.0uF | 105 | | | | | | | | | | |
| 2.2 | 225 | | | | | | | | | | |
| 3.3 | 335 | | | | | | | | | | |
| 4.7 | 475 | | | | | | | | | | |

Cal-Chip Electronics Inc.

| DIMENSION (MM) | | CHV2220 | | | | | | | | | | | | | | |
|---|---|---|---|---|---|---|---|---|---|---|---|---|---|---|---|---|
| L(L1) | | 5.70±0.40 | | | | | | | | | | | | | | |
| W | | 5.00±0.40 | | | | | | | | | | | | | | |
| BW(L2/L3) | | 3.50±0.30 | | | | | | | | | | | | | | |
| Dielectric | | COG | | | | | | | | X7R | | | | | | |
| H (max) | | 1.8 | | | | | 2.2 | 2.2 | 1.8 | 3 | 2.2 | | 2.6 | 1.8 | 1.8 | 2.2 |
| Rated Voltage | | 250 | 500 | 630 | 1KV | 2KV | 3KV | 4KV | 5KV | 250 | 500 | 1KV | 2KV | 3KV | 4KV | 5KV |
| Cap. Range | | | | | | | | | | | | | | | | |
| 2.0pF | 2R0 | | | | | | | | ■ | | | | | | | |
| 3.3 | 3R3 | | | | | | | | ■ | | | | | | | |
| 3.9 | 3R9 | | | | | | | | ■ | | | | | | | |
| 5.0 | 5R0 | | | | | | | | ■ | | | | | | | |
| 8.2 | 8R2 | | | | | | | | ■ | | | | | | | |
| 10 | 100 | ■ | ■ | ■ | ■ | ■ | ■ | ■ | ■ | | | | | | | |
| 12 | 120 | ■ | ■ | ■ | ■ | ■ | ■ | ■ | ■ | | | | | | | |
| 15 | 150 | ■ | ■ | ■ | ■ | ■ | ■ | ■ | ■ | | | | | | | |
| 18 | 180 | ■ | ■ | ■ | ■ | ■ | ■ | ■ | ■ | | | | | | | |
| 22 | 220 | ■ | ■ | ■ | ■ | ■ | ■ | ■ | ■ | | | | | | | |
| 27 | 270 | ■ | ■ | ■ | ■ | ■ | ■ | ■ | ■ | | | | | | | |
| 33 | 330 | ■ | ■ | ■ | ■ | ■ | ■ | ■ | ■ | | | | | | | |
| 39 | 390 | ■ | ■ | ■ | ■ | ■ | ■ | ■ | ■ | | | | | | | |
| 47 | 470 | ■ | ■ | ■ | ■ | ■ | ■ | ■ | ■ | | | | | | | |
| 56 | 560 | ■ | ■ | ■ | ■ | ■ | ■ | ■ | ■ | | | | | | | |
| 68 | 680 | ■ | ■ | ■ | ■ | ■ | ■ | ■ | ■ | | | | | | | |
| 82 | 820 | ■ | ■ | ■ | ■ | ■ | ■ | ■ | ■ | | | | | | | |
| 100 | 101 | ■ | ■ | ■ | ■ | ■ | ■ | ■ | ■ | ■ | ■ | ■ | ■ | ■ | ■ | ■ |
| 120 | 121 | ■ | ■ | ■ | ■ | ■ | ■ | ■ | ■ | ■ | ■ | ■ | ■ | ■ | ■ | ■ |
| 150 | 151 | ■ | ■ | ■ | ■ | ■ | ■ | ■ | ■ | ■ | ■ | ■ | ■ | ■ | ■ | ■ |
| 180 | 181 | ■ | ■ | ■ | ■ | ■ | ■ | ■ | ■ | ■ | ■ | ■ | ■ | ■ | ■ | ■ |
| 220 | 221 | ■ | ■ | ■ | ■ | ■ | ■ | ■ | ■ | ■ | ■ | ■ | ■ | ■ | ■ | ■ |
| 270 | 271 | ■ | ■ | ■ | ■ | ■ | ■ | ■ | ■ | ■ | ■ | ■ | ■ | ■ | ■ | ■ |
| 330 | 331 | ■ | ■ | ■ | ■ | ■ | ■ | ■ | ■ | ■ | ■ | ■ | ■ | ■ | ■ | ■ |
| 390 | 391 | ■ | ■ | ■ | ■ | ■ | ■ | ■ | ■ | ■ | ■ | ■ | ■ | ■ | ■ | ■ |
| 470 | 471 | ■ | ■ | ■ | ■ | ■ | ■ | ■ | ■ | ■ | ■ | ■ | ■ | ■ | ■ | ■ |
| 560 | 561 | ■ | ■ | ■ | ■ | ■ | ■ | ■ | ■ | ■ | ■ | ■ | ■ | ■ | ■ | ■ |
| 600 | 601 | ■ | ■ | ■ | ■ | ■ | ■ | ■ | ■ | ■ | ■ | ■ | ■ | ■ | ■ | ■ |
| 680 | 681 | ■ | ■ | ■ | ■ | ■ | ■ | ■ | | ■ | ■ | ■ | ■ | ■ | ■ | ■ |
| 820 | 821 | ■ | ■ | ■ | ■ | ■ | ■ | ■ | | ■ | ■ | ■ | ■ | ■ | ■ | ■ |
| 1.0nF | 102 | ■ | ■ | ■ | ■ | ■ | ■ | ■ | | ■ | ■ | ■ | ■ | ■ | ■ | ■ |
| 1.2 | 122 | ■ | ■ | ■ | ■ | ■ | ■ | ■ | | ■ | ■ | ■ | ■ | ■ | ■ | ■ |
| 1.5 | 152 | ■ | ■ | ■ | ■ | ■ | ■ | | | ■ | ■ | ■ | ■ | ■ | ■ | ■ |
| 1.8 | 182 | ■ | ■ | ■ | ■ | ■ | ■ | | | ■ | ■ | ■ | ■ | ■ | ■ | ■ |
| 2.2 | 222 | ■ | ■ | ■ | ■ | ■ | ■ | | | ■ | ■ | ■ | ■ | ■ | ■ | ■ |
| 2.7 | 272 | ■ | ■ | ■ | ■ | ■ | ■ | | | ■ | ■ | ■ | ■ | ■ | ■ | ■ |
| 3.3 | 332 | ■ | ■ | ■ | ■ | ■ | ■ | | | ■ | ■ | ■ | ■ | ■ | ■ | ■ |
| 3.9 | 392 | ■ | ■ | ■ | ■ | | | | | ■ | ■ | ■ | ■ | ■ | ■ | |
| 4.7 | 472 | ■ | ■ | ■ | ■ | | | | | ■ | ■ | ■ | ■ | ■ | ■ | |
| 5.6 | 562 | ■ | ■ | ■ | ■ | | | | | ■ | ■ | ■ | ■ | ■ | ■ | |
| 6.8 | 682 | ■ | ■ | ■ | ■ | | | | | ■ | ■ | ■ | ■ | ■ | ■ | |
| 8.2 | 822 | ■ | ■ | ■ | ■ | | | | | ■ | ■ | ■ | ■ | ■ | ■ | |
| 10 | 103 | ■ | ■ | ■ | ■ | | | | | ■ | ■ | ■ | ■ | ■ | ■ | |
| 12 | 123 | ■ | ■ | ■ | | | | | | ■ | ■ | ■ | ■ | ■ | | |
| 15 | 153 | ■ | ■ | ■ | | | | | | ■ | ■ | ■ | ■ | ■ | | |
| 18 | 183 | ■ | ■ | ■ | | | | | | ■ | ■ | ■ | ■ | | | |
| 22 | 223 | ■ | ■ | ■ | | | | | | ■ | ■ | ■ | ■ | | | |
| 27 | 273 | ■ | ■ | ■ | | | | | | ■ | ■ | ■ | ■ | | | |
| 33 | 333 | ■ | ■ | ■ | | | | | | ■ | ■ | ■ | ■ | | | |
| 39 | 393 | ■ | ■ | ■ | | | | | | ■ | ■ | ■ | ■ | | | |
| 47 | 473 | ■ | ■ | ■ | | | | | | ■ | ■ | ■ | | | | |
| 56 | 563 | ■ | ■ | ■ | | | | | | ■ | ■ | ■ | | | | |
| 68 | 683 | ■ | ■ | ■ | | | | | | ■ | ■ | ■ | | | | |
| 82 | 823 | ■ | ■ | ■ | | | | | | ■ | ■ | ■ | | | | |
| 100 | 104 | ■ | ■ | ■ | | | | | | ■ | ■ | ■ | | | | |
| 124 | 124 | ■ | | | | | | | | ■ | ■ | ■ | | | | |
| 154 | 154 | ■ | | | | | | | | ■ | ■ | ■ | | | | |
| 184 | 184 | | | | | | | | | ■ | ■ | ■ | | | | |
| 224 | 224 | | | | | | | | | ■ | ■ | ■ | | | | |
| 274 | 274 | | | | | | | | | ■ | ■ | | | | | |
| 334 | 334 | | | | | | | | | ■ | ■ | | | | | |
| 393 | 394 | | | | | | | | | ■ | ■ | | | | | |
| 474 | 474 | | | | | | | | | ■ | ■ | | | | | |
| 564 | 564 | | | | | | | | | ■ | | | | | | |
| 684 | 684 | | | | | | | | | ■ | | | | | | |
| 824 | 824 | | | | | | | | | ■ | | | | | | |
| 1.0uF | 105 | | | | | | | | | ■ | | | | | | |
| 2.2 | 225 | | | | | | | | | ■ | | | | | | |
| 3.3 | 335 | | | | | | | | | ■ | | | | | | |
| 4.7 | 475 | | | | | | | | | | | | | | | |
| 6.8 | 685 | | | | | | | | | | | | | | | |

Cal-Chip Electronics Inc.

| DIMENSION (MM) | | CHV2225 | | | | | | | | | | | | |
|---|---|---|---|---|---|---|---|---|---|---|---|---|---|---|
| L(L1) | | 5.70±0.40 | | | | | | | | | | | | |
| W | | 6.35±0.40 | | | | | | | | | | | | |
| BW(L2/L3) | | 3.50±0.30 | | | | | | | | | | | | |
| Dielectric | | COG | | | | | | | X7R | | | | | |
| H (max) | | 3.0 | | | | | | | 3.0 | 2.2 | | 2.6 | 1.8 | 2.2 |
| Rated Voltage | | 250 | 500 | 630 | 1KV | 2KV | 3KV | 4KV | 250 | 500 | 1KV | 2KV | 3KV | 4KV |
| Cap. Range | | | | | | | | | | | | | | |
| 2.0pF | 2R0 | | | | | | | | | | | | | |
| 3.3 | 3R3 | | | | | | | | | | | | | |
| 3.9 | 3R9 | | | | | | | | | | | | | |
| 5.0 | 5R0 | | | | | | | | | | | | | |
| 8.2 | 8R2 | | | | | | | | | | | | | |
| 10 | 100 | ■ | ■ | ■ | ■ | ■ | ■ | ■ | | | | | | |
| 12 | 120 | ■ | ■ | ■ | ■ | ■ | ■ | ■ | | | | | | |
| 15 | 150 | ■ | ■ | ■ | ■ | ■ | ■ | ■ | | | | | | |
| 18 | 180 | ■ | ■ | ■ | ■ | ■ | ■ | ■ | | | | | | |
| 22 | 220 | ■ | ■ | ■ | ■ | ■ | ■ | ■ | | | | | | |
| 27 | 270 | ■ | ■ | ■ | ■ | ■ | ■ | ■ | | | | | | |
| 33 | 330 | ■ | ■ | ■ | ■ | ■ | ■ | ■ | | | | | | |
| 39 | 390 | ■ | ■ | ■ | ■ | ■ | ■ | ■ | | | | | | |
| 47 | 470 | ■ | ■ | ■ | ■ | ■ | ■ | ■ | | | | | | |
| 56 | 560 | ■ | ■ | ■ | ■ | ■ | ■ | ■ | | | | | | |
| 68 | 680 | ■ | ■ | ■ | ■ | ■ | ■ | ■ | | | | | | |
| 82 | 820 | ■ | ■ | ■ | ■ | ■ | ■ | ■ | | | | | | |
| 100 | 101 | ■ | ■ | ■ | ■ | ■ | ■ | ■ | ■ | ■ | ■ | ■ | ■ | ■ |
| 120 | 121 | ■ | ■ | ■ | ■ | ■ | ■ | ■ | ■ | ■ | ■ | ■ | ■ | ■ |
| 150 | 151 | ■ | ■ | ■ | ■ | ■ | ■ | ■ | ■ | ■ | ■ | ■ | ■ | ■ |
| 180 | 181 | ■ | ■ | ■ | ■ | ■ | ■ | ■ | ■ | ■ | ■ | ■ | ■ | ■ |
| 220 | 221 | ■ | ■ | ■ | ■ | ■ | ■ | ■ | ■ | ■ | ■ | ■ | ■ | ■ |
| 270 | 271 | ■ | ■ | ■ | ■ | ■ | ■ | ■ | ■ | ■ | ■ | ■ | ■ | ■ |
| 330 | 331 | ■ | ■ | ■ | ■ | ■ | ■ | ■ | ■ | ■ | ■ | ■ | ■ | ■ |
| 390 | 391 | ■ | ■ | ■ | ■ | ■ | ■ | ■ | ■ | ■ | ■ | ■ | ■ | ■ |
| 470 | 471 | ■ | ■ | ■ | ■ | ■ | ■ | ■ | ■ | ■ | ■ | ■ | ■ | ■ |
| 560 | 561 | ■ | ■ | ■ | ■ | ■ | ■ | ■ | ■ | ■ | ■ | ■ | ■ | ■ |
| 680 | 681 | ■ | ■ | ■ | ■ | ■ | ■ | ■ | ■ | ■ | ■ | ■ | ■ | ■ |
| 820 | 821 | ■ | ■ | ■ | ■ | ■ | ■ | ■ | ■ | ■ | ■ | ■ | ■ | ■ |
| 1.0nF | 102 | ■ | ■ | ■ | ■ | ■ | ■ | ■ | ■ | ■ | ■ | ■ | ■ | ■ |
| 1.2 | 122 | ■ | ■ | ■ | ■ | ■ | ■ | ■ | ■ | ■ | ■ | ■ | ■ | ■ |
| 1.5 | 152 | ■ | ■ | ■ | ■ | ■ | ■ | ■ | ■ | ■ | ■ | ■ | ■ | ■ |
| 1.8 | 182 | ■ | ■ | ■ | ■ | ■ | ■ | ■ | ■ | ■ | ■ | ■ | ■ | ■ |
| 2.2 | 222 | ■ | ■ | ■ | ■ | ■ | ■ | ■ | ■ | ■ | ■ | ■ | ■ | ■ |
| 2.7 | 272 | ■ | ■ | ■ | ■ | ■ | ■ | ■ | ■ | ■ | ■ | ■ | ■ | ■ |
| 3.3 | 332 | ■ | ■ | ■ | ■ | ■ | ■ | ■ | ■ | ■ | ■ | ■ | ■ | ■ |
| 3.9 | 392 | ■ | ■ | ■ | ■ | ■ | ■ | ■ | ■ | ■ | ■ | ■ | ■ | ■ |
| 4.7 | 472 | ■ | ■ | ■ | ■ | ■ | ■ | ■ | ■ | ■ | ■ | ■ | ■ | ■ |
| 5.6 | 562 | ■ | ■ | ■ | ■ | ■ | ■ | ■ | ■ | ■ | ■ | ■ | ■ | ■ |
| 6.8 | 682 | ■ | ■ | ■ | ■ | ■ | ■ | ■ | ■ | ■ | ■ | ■ | ■ | ■ |
| 8.2 | 822 | ■ | ■ | ■ | ■ | ■ | ■ | ■ | ■ | ■ | ■ | ■ | ■ | ■ |
| 10 | 103 | ■ | ■ | ■ | ■ | ■ | ■ | ■ | ■ | ■ | ■ | ■ | ■ | ■ |
| 12 | 123 | ■ | ■ | ■ | ■ | ■ | ■ | ■ | ■ | ■ | ■ | ■ | ■ | ■ |
| 15 | 153 | ■ | ■ | ■ | ■ | ■ | ■ | ■ | ■ | ■ | ■ | ■ | ■ | ■ |
| 18 | 183 | ■ | ■ | ■ | ■ | ■ | ■ | ■ | ■ | ■ | ■ | ■ | ■ | ■ |
| 22 | 223 | ■ | ■ | ■ | | | | | ■ | ■ | ■ | ■ | | |
| 27 | 273 | ■ | ■ | ■ | | | | | ■ | ■ | ■ | ■ | | |
| 33 | 333 | ■ | ■ | ■ | | | | | ■ | ■ | ■ | ■ | | |
| 39 | 393 | ■ | ■ | | | | | | ■ | ■ | ■ | ■ | | |
| 47 | 473 | ■ | ■ | | | | | | ■ | ■ | ■ | ■ | | |
| 56 | 563 | ■ | | | | | | | ■ | ■ | ■ | ■ | | |
| 68 | 683 | | | | | | | | ■ | ■ | ■ | ■ | | |
| 82 | 823 | | | | | | | | ■ | ■ | ■ | ■ | | |
| 100 | 104 | | | | | | | | ■ | ■ | ■ | ■ | | |
| 124 | 124 | | | | | | | | ■ | ■ | ■ | | | |
| 154 | 154 | | | | | | | | ■ | ■ | ■ | | | |
| 184 | 184 | | | | | | | | ■ | ■ | ■ | | | |
| 224 | 224 | | | | | | | | ■ | ■ | ■ | | | |
| 274 | 274 | | | | | | | | ■ | ■ | ■ | | | |
| 334 | 334 | | | | | | | | ■ | ■ | | | | |
| 393 | 394 | | | | | | | | ■ | ■ | | | | |
| 474 | 474 | | | | | | | | ■ | ■ | | | | |
| 564 | 564 | | | | | | | | ■ | | | | | |
| 684 | 684 | | | | | | | | ■ | | | | | |
| 824 | 824 | | | | | | | | ■ | | | | | |
| 1.0uF | 105 | | | | | | | | ■ | | | | | |
| 2.2 | 225 | | | | | | | | ■ | | | | | |
| 3.3 | 335 | | | | | | | | ■ | | | | | |
| 4.7 | 475 | | | | | | | | ■ | | | | | |
| 6.8 | 685 | | | | | | | | | | | | | |
| 8.2 | 825 | | | | | | | | | | | | | |
| 100 | 106 | | | | | | | | | | | | | |

## Packaging (Taping)

(Reel Type-Size)

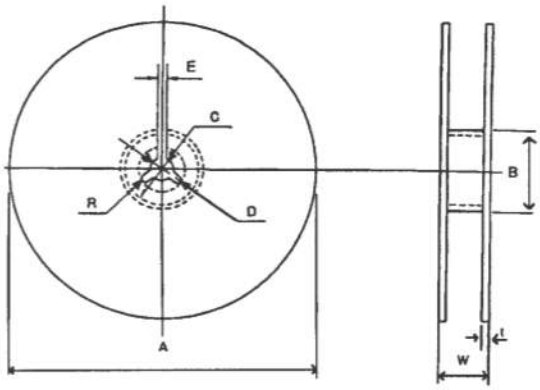


**Standard Reel** Unit:mm

| A | B | C | D | E | W | t | R |
|---|---|---|---|---|---|---|---|
| ø178 ±2.0 | ø50 min. | ø13.0 ±0.5 | ø21.0 ±0.8 | 2.0 ±0.5 | 10.2 - 8mm 14.0 - 12mm +1.5 | 0.8 ±0.2 | 1.0 |

**"TD" designator for optional 10/13 inch reels** Unit:mm

| A | B | C | D | E | W | t | R |
|---|---|---|---|---|---|---|---|
| ø330 +2.0 | ø50 min. | ø13.0 ±0.5 | ø21.0 ±0.8 | 2.0 ±0.5 | 10.0 ±1.5 | 0.8 ±0.2 | 1.0 |

- To peel off the cover tape by the method shown in the right figure apply a peel-off force of 20 gf - 60 gf (card board); 10 gf - 75 gf (plastic tape).
- The cover tape should not touch the top or bottom of the chip.
- If the cover tape has been peeled off it may be difficult to remove the chip due to punch-hole clearance, dirt, and debris. Make sure therefore that no paper waste will adhere to and block the absorption nozzle.
- If the cover tape has been peeled off from the top, stick it back on with a suitable adhesive.
- Follow the illustration for the start and end of the winding operation.

**Carrier Tape (Standard)**

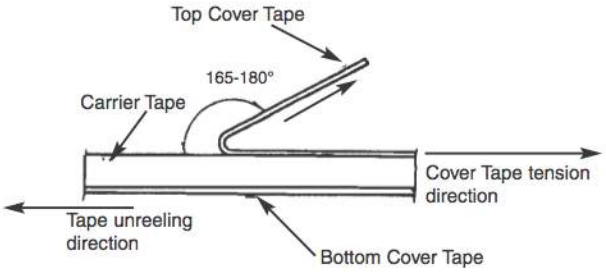


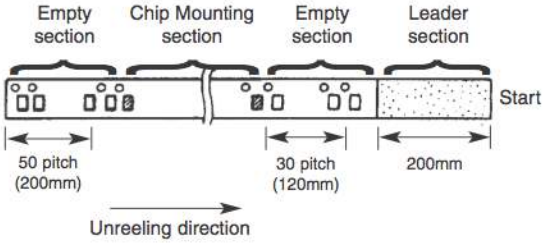


- Cardboard carrier tape for 0402,0603 type and 0805/1206 type

Unit: mm

| Type | A | B | W | F | E | $P_1$ | $P_2$ | $P_0$ | $D_0$ | $t_1$ | $t_2$ | Mounting Hole | Std Reel Qty. 7in (10/13in)* |
|---|---|---|---|---|---|---|---|---|---|---|---|---|---|
| 0402 | 0.7±0.2 | 1.3±0.2 | 8.0±0.3 | 3.5±0.05 | 1.75±0.1 | 4.0±0.1 | 2.0±0.05 | 4.0±0.1 | ø1.5+0.1 | 1.1 max | 1.4 max | Angular Punch Hole | 10,000 (20,000) |
| 0603 | 1.1±0.2 | 1.9±0.2 | | | | | | | | | | | 4,000 (10,000) |
| 0805 | 1.65±0.2 | 2.4±0.2 | | | | | | | | | | | 4,000 (10,000) |
| 1206 | 2.0±0.2 | 3.6±0.2 | | | | | | | | | | | 4,000 (10,000) |

*quantities listed are considered as "standard" and subject to change

- **Embossed plastic carrier tape for 0805/1206 type and 1210 type**

Unit=mm

| Type | A | B | W | F | E | $P_1$ | $P_2$ | $P_0$ | $D_0$ | $t_1$ | $t_2$ | Mounting Hole | Std Reel Qty 7" | Optional Reel Qty (10/13") |
|---|---|---|---|---|---|---|---|---|---|---|---|---|---|---|
| 0805 | 1.45±0.2 | 2.3±0.2 | 8.0±0.3 | 3.5±0.05 | 1.75±0.1 | 4.0±0.1 | 2.0±0.05 | 4.0±0.1 | Φ1.5+1/-0 | 0.6 max | 2.5 max | Angular Embossed Hole | 2,000 3,000 | 10,000 |
| 1206 | 2.0±0.2 | 3.6±0.2 | | | | | | | | | | | 2,000 3,000 | 10,000 |
| 1210 | 2.9±0.2 | 3.6±0.2 | | | | | | | | | | | 1,000 2,000 3,000 | 4,000 |
| 1812 | 3.6±0.2 | 4.9±0.2 | 12.0±0.3 | 5.5±0.05 | 1.75±0.1 | 8.0±0.1 | 2.0±0.05 | 4.0±0.1 | Φ1.5±0.1 | 0.6 max | 6.5 max | Angular Embossed Hole | 500 1,000 | 2,000 |
| 1825 | 6.8±0.3 | 4.9±0.2 | | | | | | | | | | | 500 1,000 | 1,500 |
| 2220 | 5.5±0.3 | 6.2±0.3 | | | | | | | | | | | 500 1,000 | 1,500 |
| 2225 | 6.8±0.3 | 6.2±0.3 | | | | | | | | | | | 500 700 | 1,000 |

*quantities listed are considered as "standard" and subject to change

## ■ Packaging

Tape and reel packing of surface mounting chip capacitors for automatic placement are in accordance with IEC286 part 3 and RS481

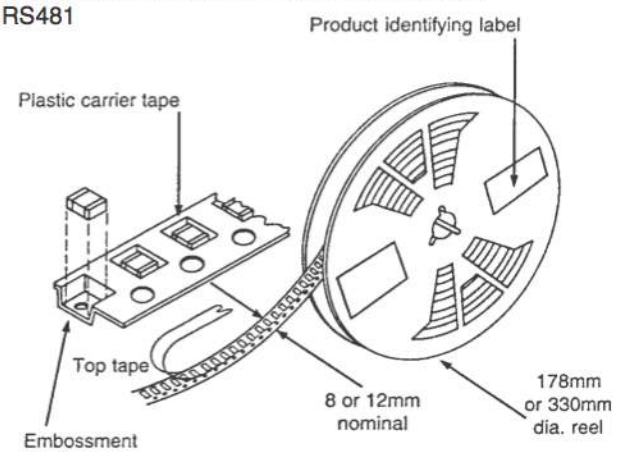


Peel force
The peel force of the top sealing tape is between 0.2 and 1.0 Newton at 1800. The breaking force of the carrier and sealing tape in the direction of unreeling is greater than 10 Newtons.

### Reel dimensions mm (inches)

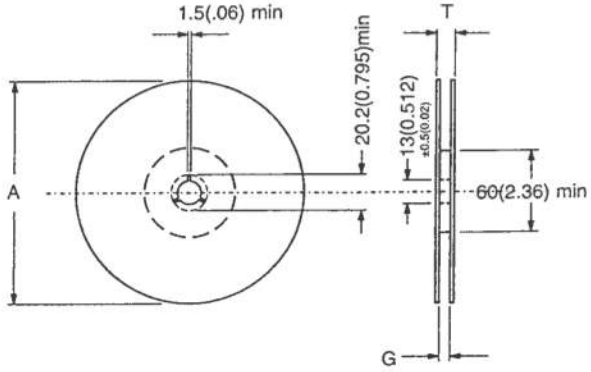


| Symbol | Description | 178mm reel | 330mm reel |
|---|---|---|---|
| A | Reel diameter | 178(7) ±2(0.079) | 330(13) max |
| G | Reel inside with | 8.4(0.33) ±1.5(0.059)-0 | 12.4(0.49) ±1.5(0.059)-0 |
| T | Reel outside with | 14.4(0.56) max | 18.4(0.72) max |

### Tape dimensions mm (inches)

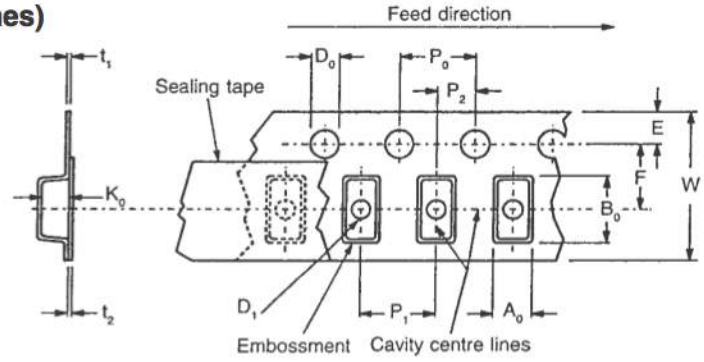


| Symbol | Description | 8mm tape | 12mm tape |
|---|---|---|---|
| $A_o$ $B_o$ $K_o$ | Width of cavity Length of cavity Depth of cavity | Dependent on chip size to minimize rotation | |
| W | Width of tape | 8(0.315) ±0.2(0.008) | 12(0.472) ±0.2(0.008) |
| F | Distance between drive hole centres and cavity centres | 3.5(0.138) ±0.05(0.002) | 5.5(0.213) ±0.05(0.002) |
| E | Distance between drive hole centres and tape edge | 1.75(0.069) ±0.1(0.004) | |
| $P_1$ | Distance between cavity centres | 4(0.156) ±0.1(0.004) | 8(0.315) ±0.1(0.004) |
| $P_2$ | Axial distance between drive hole centres and cavity centres | 2(0.079) ±0.05(0.002) | |
| $P_o$ | Axial distance between drive hole centres | 4(0.156) ±0.1(0.004) | |
| $D_o$ | Drive hole diameter | 1.5(0.059) +0.1(0.004)-0 | |
| $D_1$ | Diameter of cavity piercing | 1(0.039) +0.1(0.004)-0 | 1.5(0.059) +0.1(0.004)-0 |
| $t_1$ | Embossed tape thickness | 0.3(0.012) ±0.1(0.004) | 0.4(0.016) ±0.1(0.004) |
| $t_2$ | Top tape thickness | 0.1(0.004) max | |