# T-1 SUB-MIDGET FLANGE BASE

## SUBMINIATURE LAMP

**28V 24mA**

| WAMCO PART NO. | ENVELOPE SIZE | BASE TYPE | RATING | FILAMENT SHAPE |
|---|---|---|---|---|
| WL-6839 | T-1 | SMF | 28V 24mA | CC-2F |

| | CURRENT (mA) | | | LIGHT OUTPUT (MSCP) | | | |
|---|---|---|---|---|---|---|---|
| TEST VOLTS | MIN | NOM | MAX | MIN | NOM | MAX | LIFE HRS |
| 28V | 21.6 | 24.0 | 26.4 | .112 | .150 | .188 | 16,000 |

## DIMENSIONAL CHARACTERISTICS

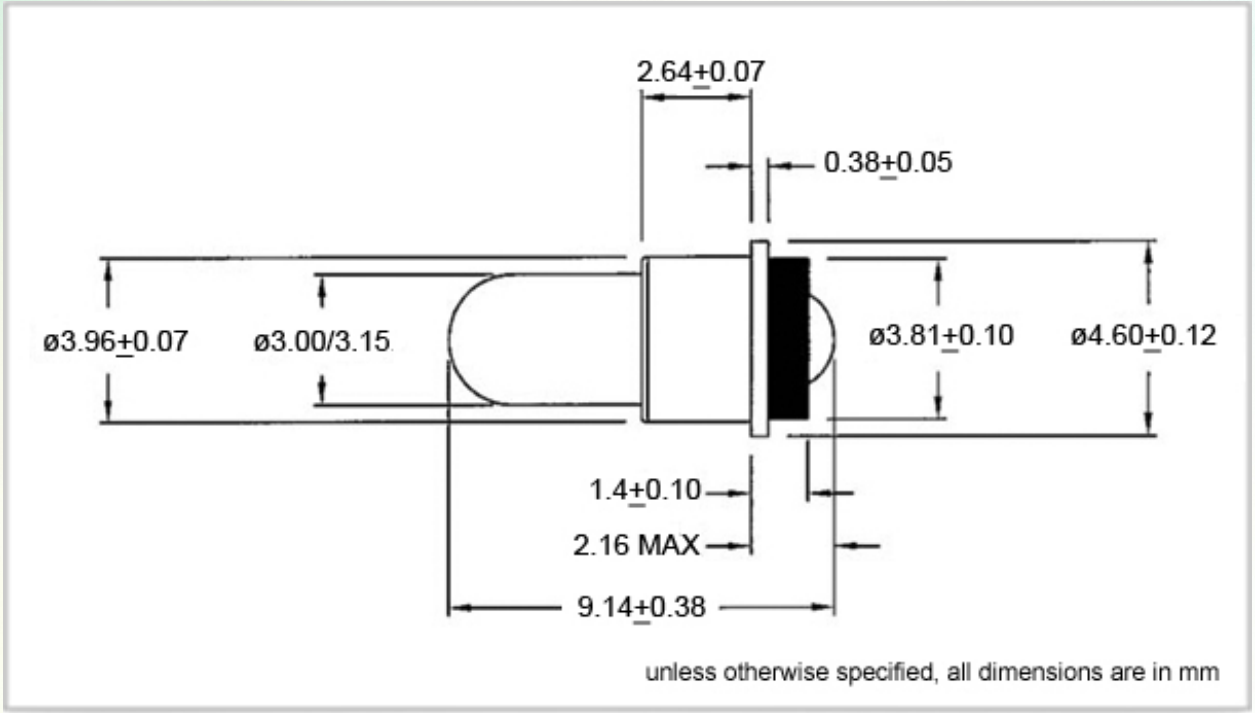


## NOTES

1. Part mark WL-6839
2. RoHS compliant
3. ANSI trade number 6839
4. Military Standard number MS3338-6839

P: (714) 545-5560 F: (714) 545-6093
W: WWW.WAMCOINC.COM E: INFO@WAMCOINC.COM