佳尼有限公司 CANAL COMPONENTS INC

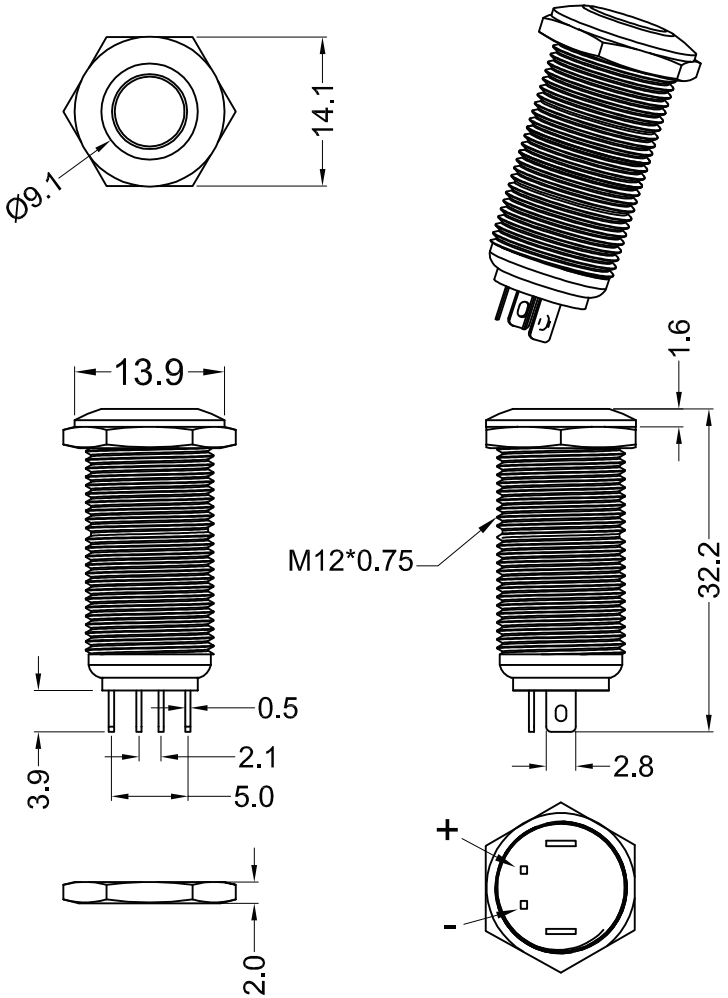

Nut Torque:5 ～ 14Nm
Operating Pressure:300gf ±200gf
Operating Stroke:2.8mm±0.3
Protection Grade:IP67,IK08
Function:ON-OFF
Base:PA66
Shell:Aluminum alloy anodizing
Button:Aluminum alloy anodizing
Lamp Type:Ring Lamp（LED)
Lamp Life:50000H
Forward current : 20mA
Beads Color: ◆
Lamp voltage: ▲
Rating: 2A 250V AC
Contact Resistance: 50mΩ MAX.
Insulation Resistance: 100MΩ MIN .
Dielectric Strength: 2000VAC 1Am of 1 minute
Dlectrical life: 100,000 cycles
Mechanical life :500,000 cycles
Operating Temperature: -20°C~80°C
Safety Approval: CE RoHS

CUT-OUT

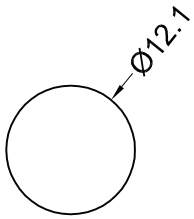

SWITCHING CIRCUIT

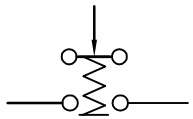

GU	
RU	3V
RG	6V
Y	12V
O	24V
U	48V
G	110V
R	220V
灯发光颜色 ◆ Emitted color ◆	灯电压 ▲ Lamp voltage ▲

NOTE: TOLERANCES UNLESS OTHERWISE SPECIFIED : ± $^{.012}_{0.3}$ (mm).

REVISION	DESCRIPION	REVISED BY	TOLEANCES .X .XX ANGLE ½°					UNIT mm	PART NAME	SPEC DRAWING	DWG NO
4			DRAWN BY	張俊雄	DESIGNED BY	王豐文	SCALE				WS2901A
3											
2			CHECKED BY	Jimmy	APPROVED BY		DATE	2015.10.26	PART NO	PBM-12Z12-FB-#1-R##-A6-S	
1 2015.10.26	首次出圖	張俊雄									