嘉尼企業股份有限公司CANAL ELECTRONIC CO.,LTD.

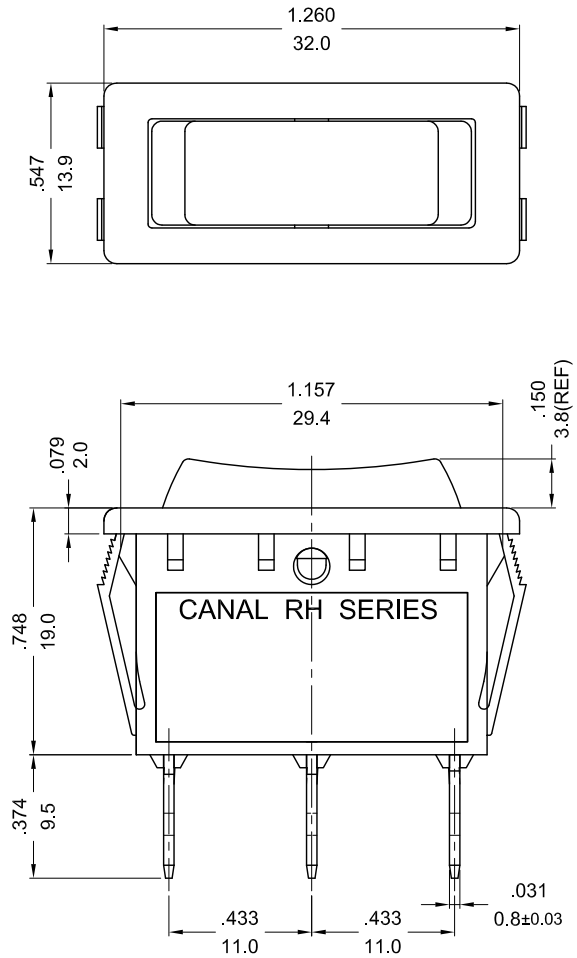

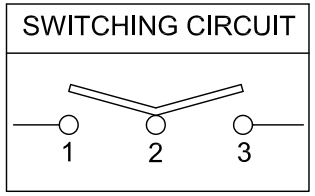

ON-OFF-ON

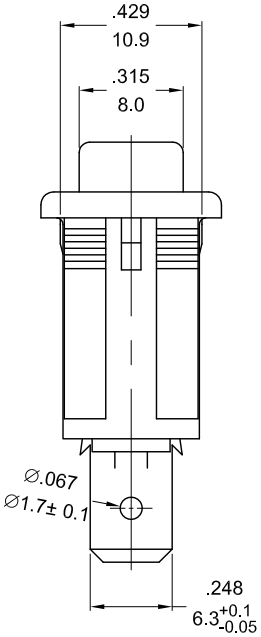

ROCKER SWITCH MODEL: RH SERIES

RATING:16A 125/250VAC (UL/CUL)
16(4)A 250V~ μT85/55 (ENEC 10 VDE /CQC)
DIELECTRIC WITHSTAND VOLTAGE:1000VAC 1 MINUTE
INSULATION RESISTANCE:500VDC 100MΩ (MIN.)
CONTACT RESISTANCE:20mΩ INITIAL (MAX.)

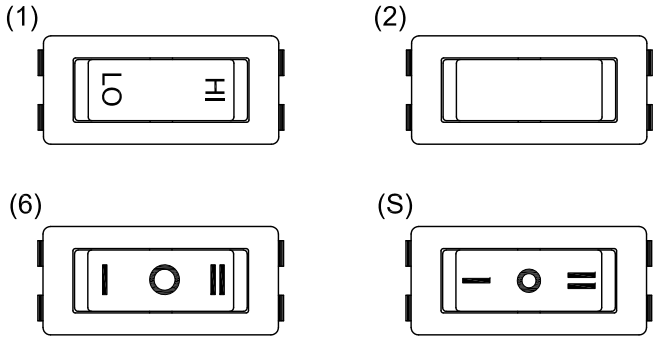

SCALE 1:1

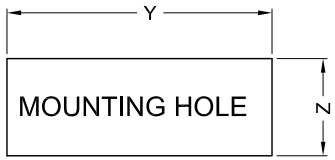

X=panel thickness	Dim.Y	Dim.Z
0.75 ~ 1.25 mm	$30.0^{+0.1}_{-0}$	$11.0^{+0.1}_{-0}$
1.25 ~ 2 mm	$30.2^{+0.1}_{-0}$	$11.0^{+0.1}_{-0}$
2 ~ 3 mm	$30.5^{+0.1}_{-0}$	$11.0^{+0.1}_{-0}$

NOTE: TOLERANCES UNLESS OTHERWISE SPECIFIED:± 0.012/0.3 (in/mm)

REVISION	DESCRIPTION	REVISED BY	TOLERANCES				ANGLE ½°	UNIT	mm	PART NAME	RH SPEC DRAWING	DWG NO
4			DRAWN BY	聶明	DESIGNED BY	聶明	SCALE	5/3				S5063A
3												
2			CHECKED BY	2013.02.05 08:26:49 +08'00'	APPROVED BY	2013.02.05 08:27:12 +08'00'	DATE	2013.02.05		PART NO	RH130-C*N-**N-1*C	
1 2013.02.05	首次出圖	聶 明										